***AIM*: -** To study the working and function of mountings and accessories in boilers.

***Apparatus:* -** Model of mountings and accessories parts in boilers.

Theory:-

***Boiler:* -** A steam boiler is a closed vessel in which steam is produced from water by combustion of fuel.

BOILER MOUNTINGS: -

The components which are fitted on the surface of the boiler for complete safety and control of steam generation process are known as boiler mountings. The following are the various important mountings of a boiler.

Pressure Gauge- It is usually mounted on the front top of the boiler shell. It is mountedoneachboilertoshowthepressureofthesteam.Itsdialisgraduatedto read the pressure in Kilograms per sq. centimeter. Bourdon's pressure gauge is commonly used as shown in Fig. The essential elements of this gauge are the ellipticalspringtubewhichismadeofbronzeandissoliddrawn.Oneendofthis tubeisattachedbylinestoatoothedquadrantandtheotherendisconnectedtoa steamspace.

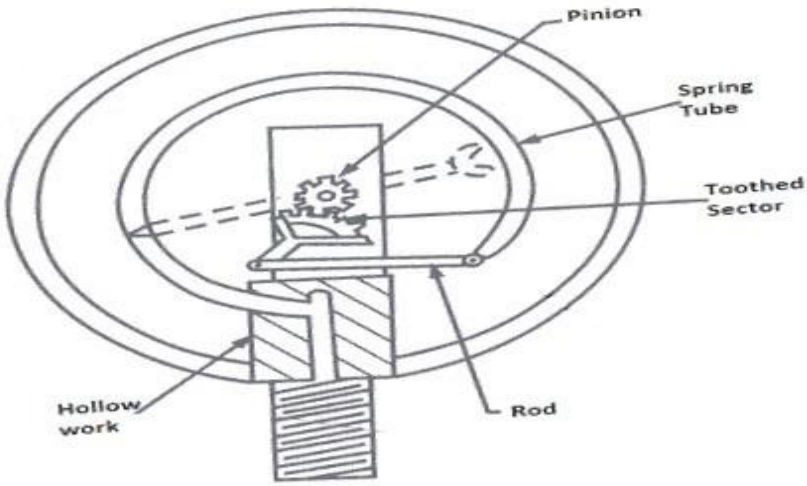

Figure- Pressure Gauge

Safety Valves- They are needed to blow off the steam when pressure of the steam in the boiler exceeds the working pressure. These are placed on the top of the boiler. There are four types of safety valves:

1. Dead weight safetyvalve
2. Lever safetyvalve
3. Spring loaded safetyvalve
4. Low water high steam safetyvalve

Spring loaded safety valve- A spring loaded safety valve is mainly used for locomotives and marine boilers. In this type the valve is loaded by means of a

spring, instead of dead weight. A spring loaded safety valve is as shown in the Fig.

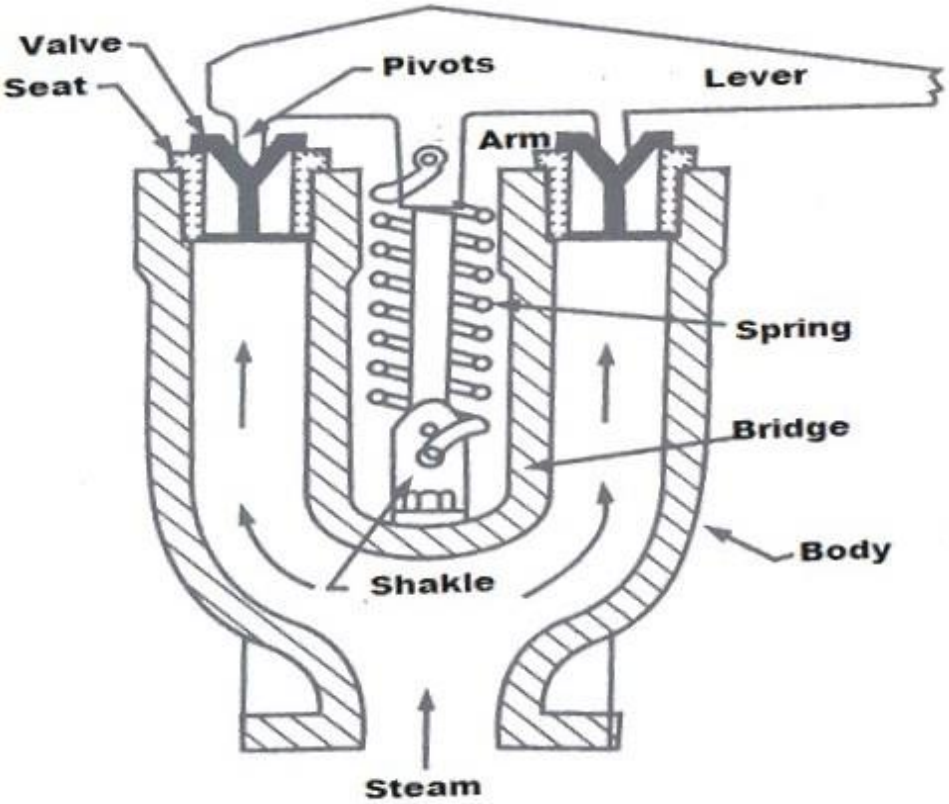

Figure- Spring Loaded Safety Valve

It consists of two valves, resting on their seats. Valve seats are mounted on the upper ends of two hallow valve chests, which are connected by a bridge. The lower end of these valves chests have common passage which may be connected to the boiler. There is a lever which has two pivots, one of which is integral with it andthe other is pin jointed to the lever. This pivot rests on the valves and forces them to rest on their respective seats with the help of a helical spring.

Feed Check Valve- A feed check valve is shown in Fig. The function of the feed check valve is to allow the supply of water to the boiler at high pressure continuouslyandtopreventthebackflowtheboilerwhenthepumppressureisless than boiler pressureor

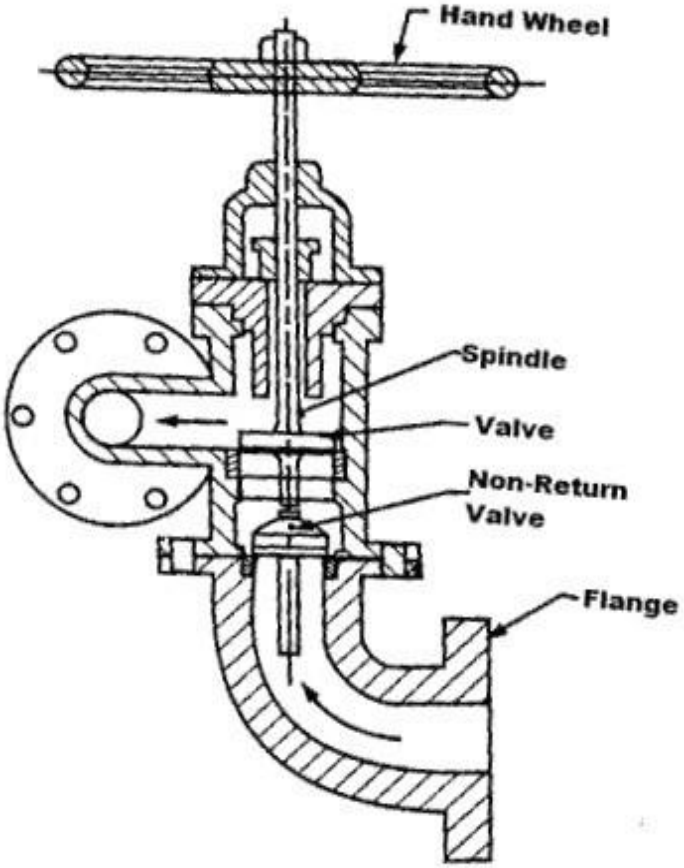

Figure- Feed Check Valve

when pump fails. Feed check valve is fitted to the shell slightly below the normal water level of the boiler.

Fusible Plug- It is fitted to the crown plate of the furnace of the fire. The function of fusible plug is to extinguish the fire in the fire box, when water level in the boiler comes down the limit and it prevents from blasting the boiler, melting the tube and over heating the fire-box crown plate. A fusible plug is shown in fig. It is located in waterspaceoftheboiler.Thefusiblemetalisprotectedfromdirectcontactofwater by gun metal plug and copper plug. When water level comes down, the fusible metal melts due to high heat and copper plug drops down and is held by gunmetal ribs. Steam comes in contact with fire and distinguishes it. Thus it prevents boiler fromdamages.

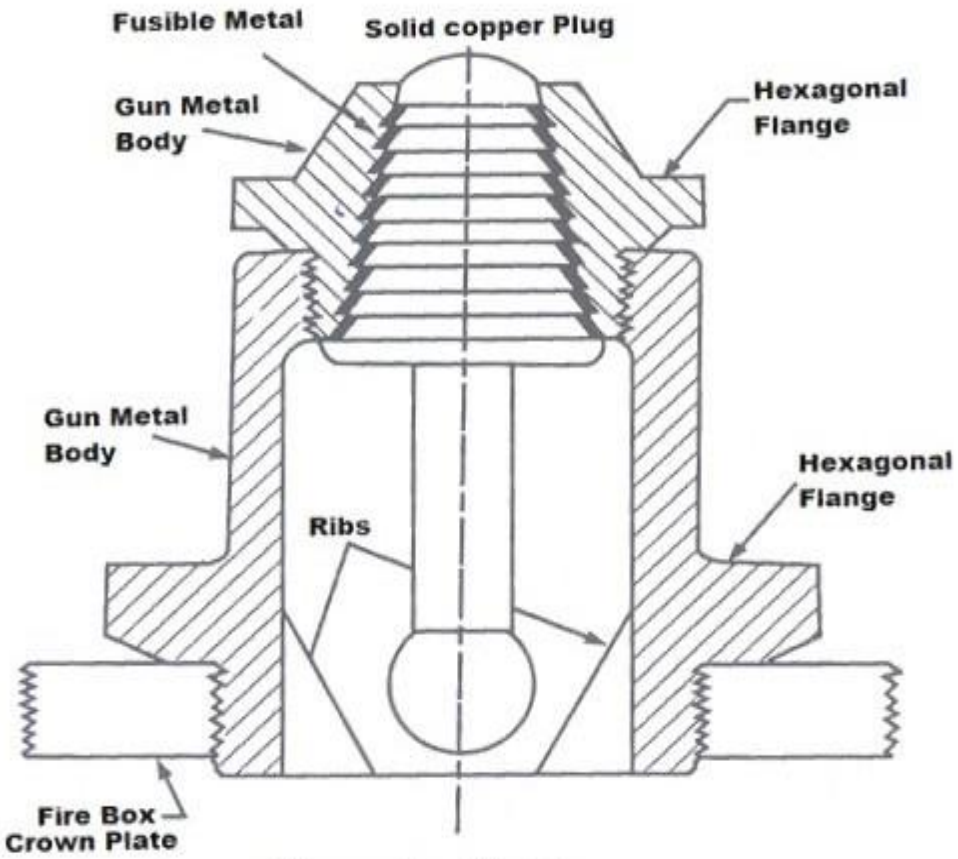

Figure- Fusible Plug

Blow Off Cock- The blow off cock as shown in fig., is fitted to the bottom of a boiler drum and consists of a conical plug fitted to body or casing. The casing is packed,withasbestospacking,ingrovesroundthetopandbottomoftheplug.The asbestos packing is made tight and plug bears on the packing. Blow off cock has to principle functionare:

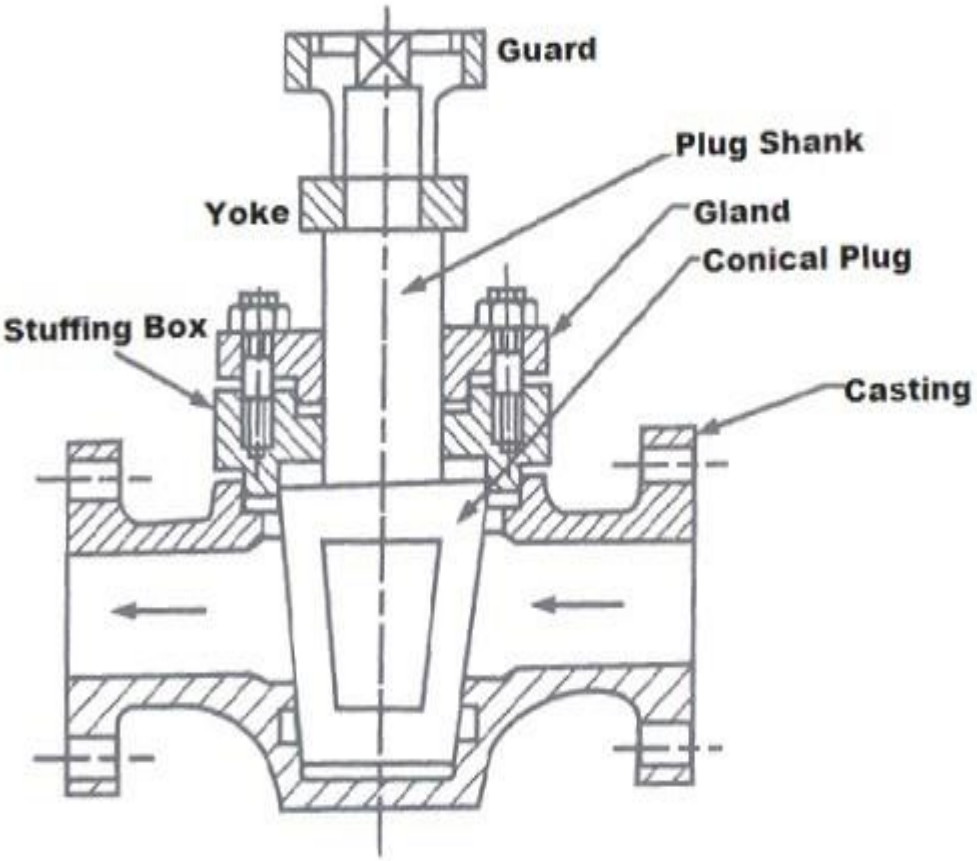

Figure- Blow Off Cock

1. To empty the boiler wheneverrequired.
2. To discharge the mud, scale or sedimentation which are accumulated at the bottom of theboiler.

Water Level Indicator- It is an important fitting, which indicates the water level inside the boiler to an observer. It is a safety device, up on which the correct working of the boiler depends. This fitting may be seen in froth of the boiler, and are generally two in number. The upper end of the valve opens in steam space while the lower end opens in the water. The valve consists of a strong glass tube. Theendofthetubepassthroughstuffingboxesformedinthehollowcasting.These casting are flanged and bolted to the boiler. It has three cocks; two of themcontrol the passage between the boiler and glass tube, while the third one (the draincock) remainsclosed.

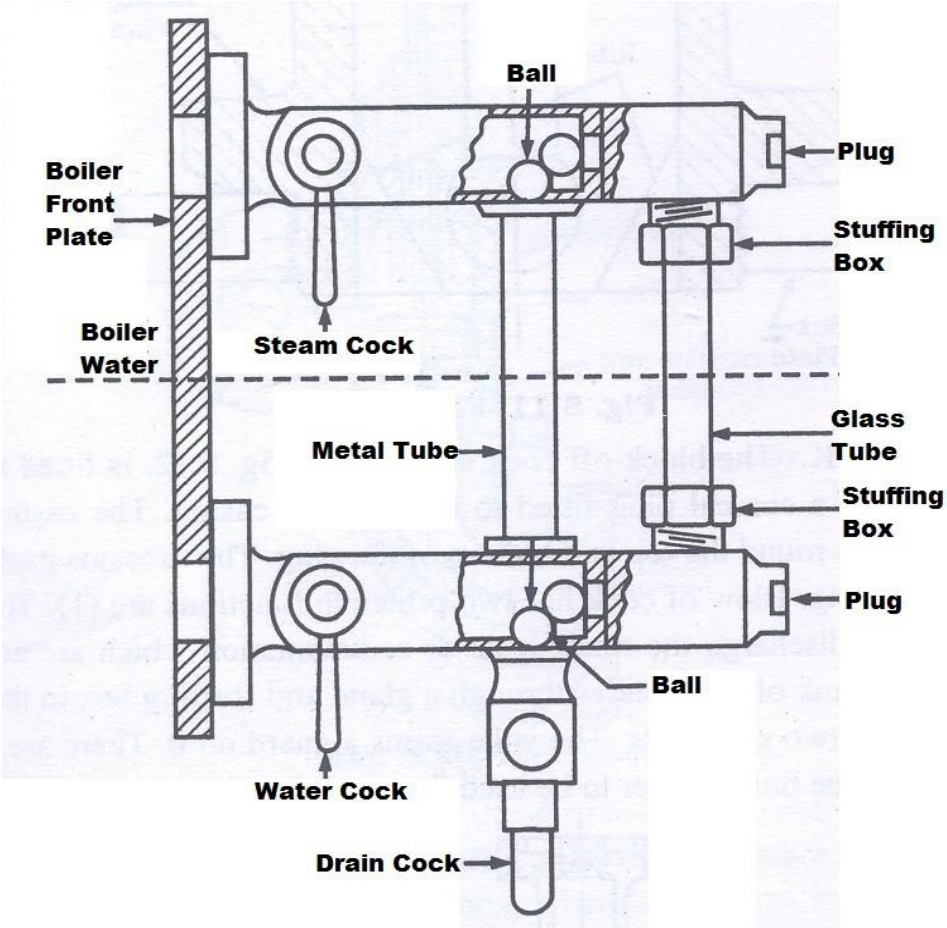

Fig. Water Level Indicator

Steam Stop Valve- A valve placed directly on a boiler and connected to the steam pipe which carries steam to the engine or turbine is called stop valve or junction valve. It is the largest valve on the steam boiler. It is, usually, fitted to the highest part of the shell by means of a flange as shown in fig.

The principal functions of a stop valve are:

1. Tocontroltheflowofsteamfromtheboilertothemainsteampipe.
2. To shut off the steam completely whenrequired.

Thebodyofthestopvalveismadeofcastironorcaststeel.Thevalveseatandthe nutthroughwhichthevalvespindleworks,aremadeofbrassorgunmetal.

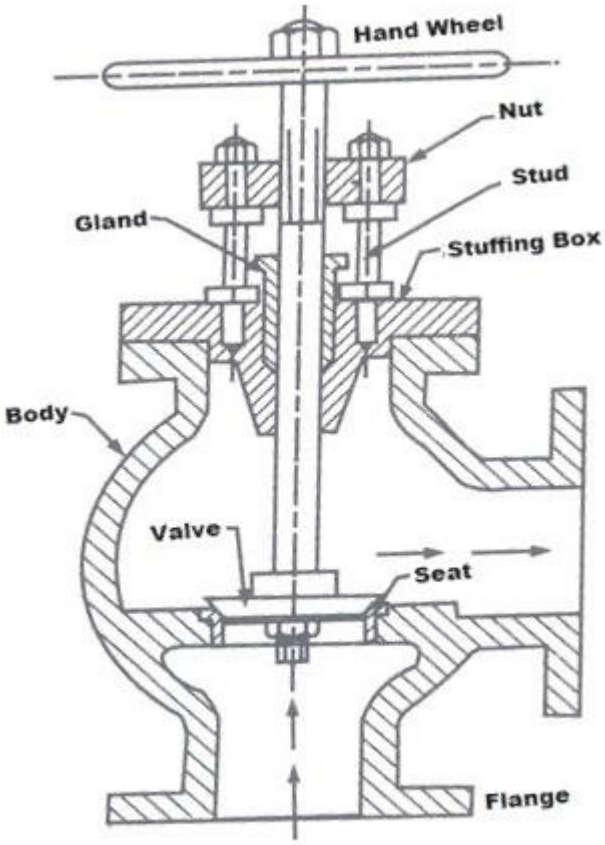

Figure-Steam Stop Valve

BOILER ACCESSORIES:

The appliances installed to increase the efficiency of the boiler are known as the boiler accessories. The commonly used accessories are:

Economiser- Economiser is a one type of heat exchange which exchanges the somepartsofthewasteheatoffluegastothefeedwater.Itisplacedbetweenthe exit of the furnace and entry into the chimney. Generally economiser is placed after the feed pump because in economiser water may transfer into vapour partially, which creates a priming problem in feed pump water into the boiler drum. If economiser is used before feed pump it limits the temperature rise of water. As economiser is shown infig.

It consists of vertical cast iron tubes attached with scraper. The function of scraper is to remove the root deposited on the tube, mechanically.

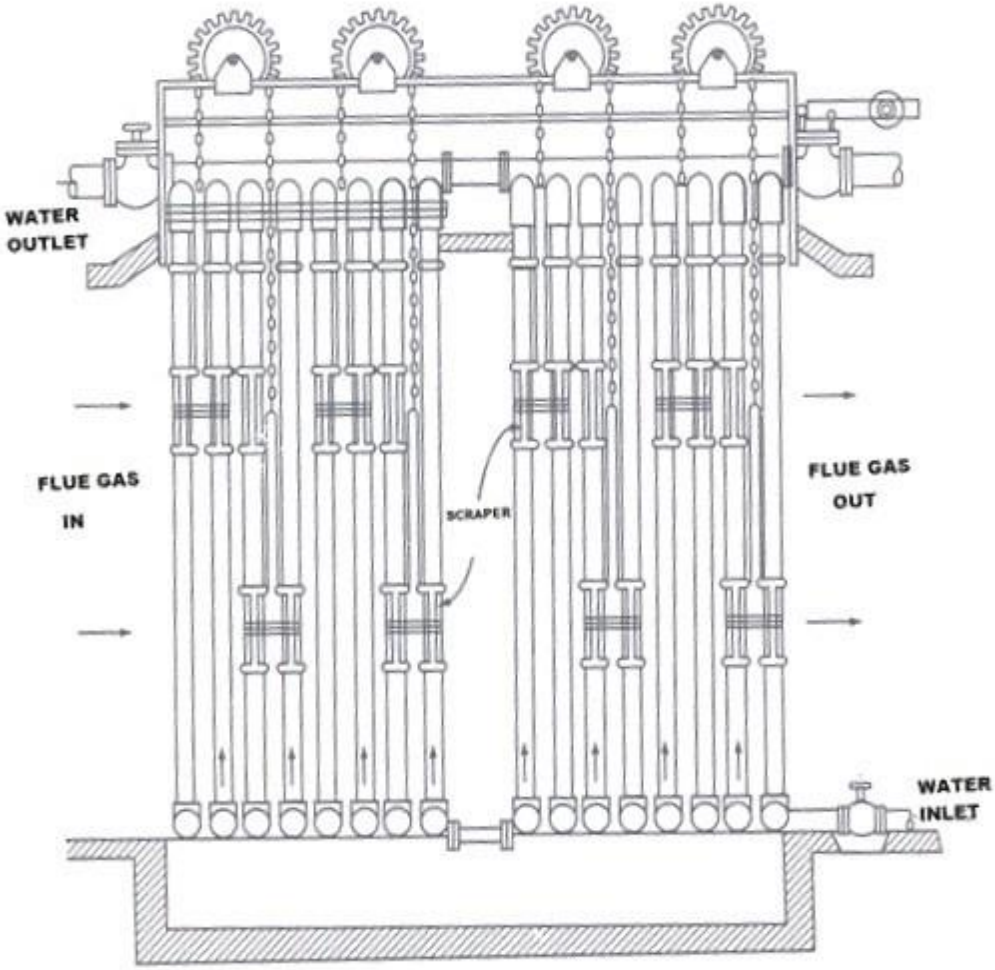

Figure- Economiser

Steam Injector- An injector is a device which is used to lift and force water into a boiler i.e. operating at high pressure. It consists of a group of nozzles, so arranged thatsteamexpandinginthesenozzlesimpartsitskineticenergytoamassofwater. There are many advantages of using injector such as they occupy minimum space, have low initial costs and maintenance cost. Though the steam required to operate theinjectorismuchmorethanthatinthefeedpumpforanequivalentduty;the injector has the advantage that practically the whole of the heat of the steam is returned back to the boiler.

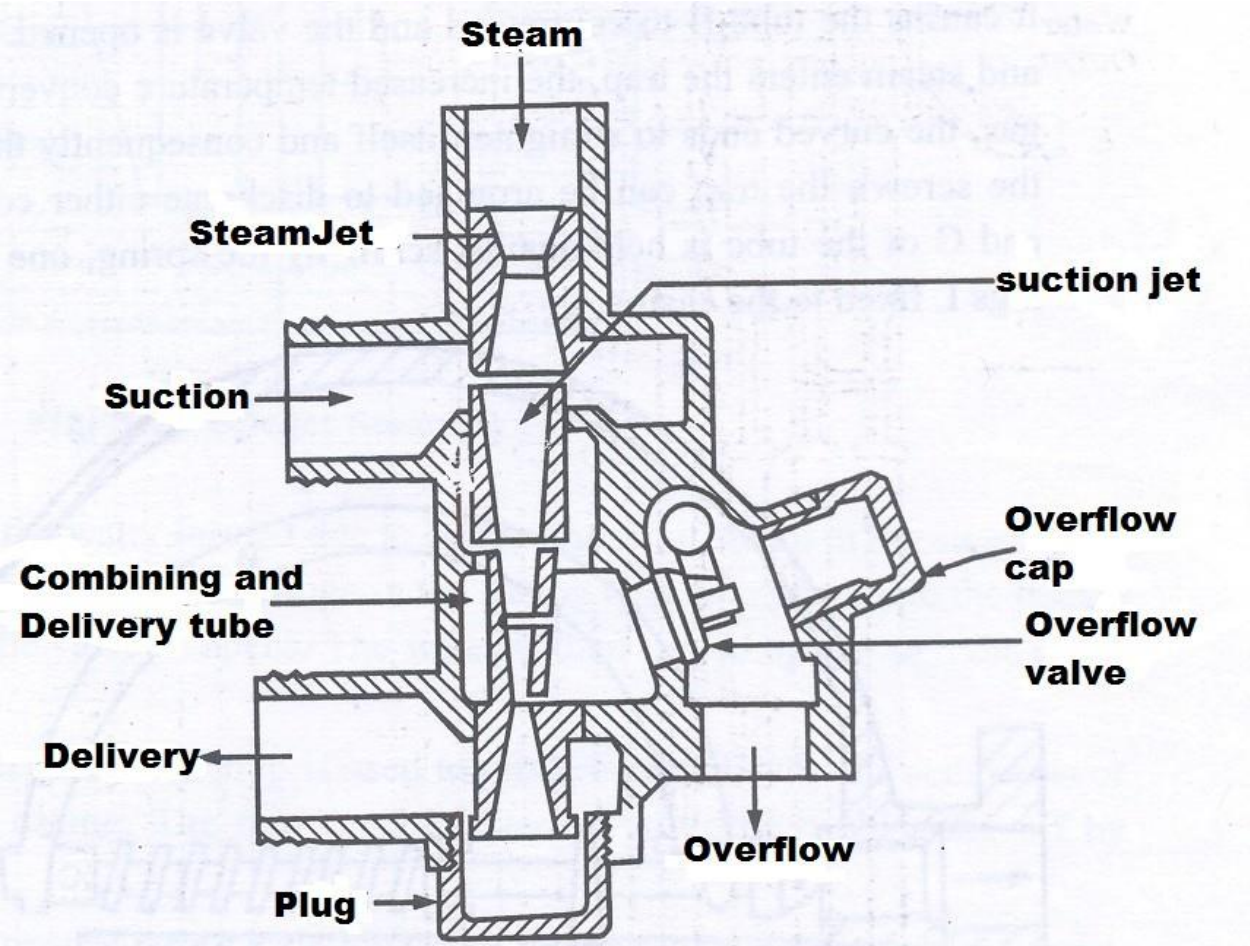

Figure- Injector

Super Heater- An element of steam generating unit in which the steam is super heated, is known is super heater. A super heater is used to increase the temperature of saturated steam at constant pressure. It is usually placed in the path of hot flue gases and heat of the flue gases is first used to superheat the steam as shown in figure. The steam enters in the down-steam tube and leaves at the front header. The overheating of super heater tube is prevented by the use ofa balanced damper which controls the flue gas. Steam consumption of turbine is reducedbyabout1%foreach5.5°Cofsuperheat.

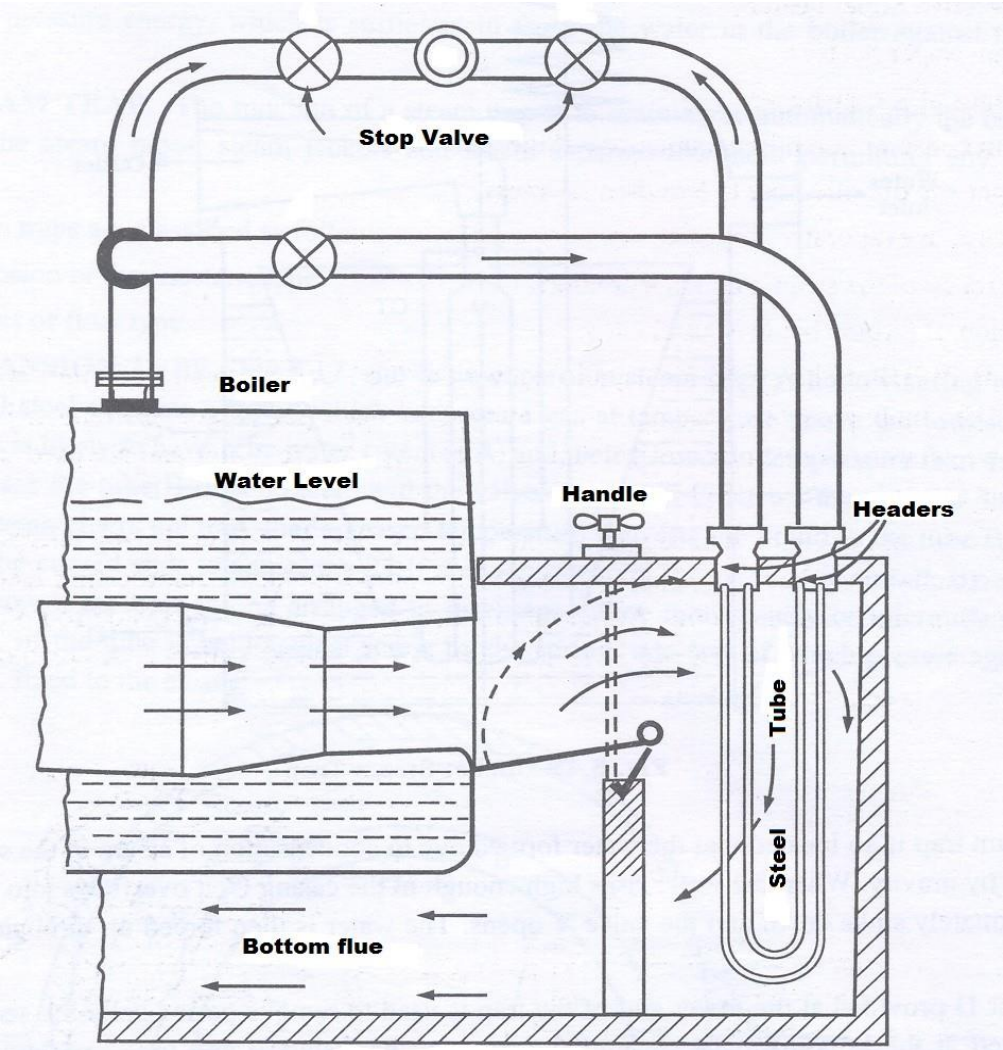

Fig. Super Heater

Feed Pump- The function of the feed pump is to pump the feed water to the boiler. The pumps may be rotary or reciprocating. The rotary pump is generally of high speed centrifugal type. They are driven by small steam turbine or by electric motor and are used when large quantity of water is to be supplied to boiler. The reciprocatingpumpsmaybesingleordoubleacting.Themostcommonlyusedform of independent reciprocating feed pump is that in which the steam cylinder is directlyconnectedtotherodortothepistonofthewatercylinder.

Air Pre-heater- The function of air pre-heater is to increase the temperature of air before it enters the furnace. It is installed between the economiser and the chimney. The air required for the purpose of combustion is drawn through the air pre-heateranditstemperatureisraisedwhenpassedthroughducts.Thepreheated air gives higher furnace temperature which results in more heat transfer to the waterandreducesthefuelconsumption.Therearethreetypesofpre-heaters:

1. Tubulartype 2.Platetype 3. Regenerativetype

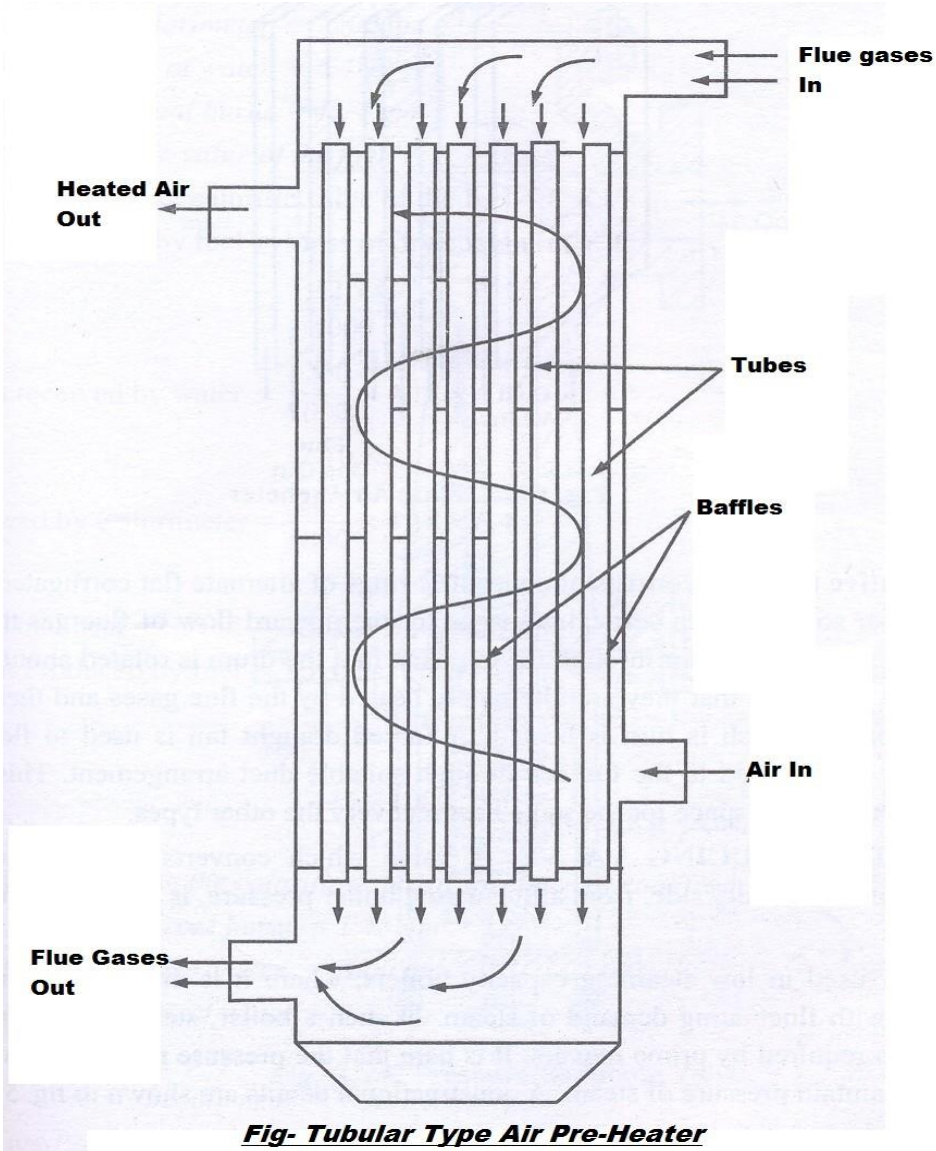

Fig- Tubular Type Air Pre-Heater

AIM: - To Study of working of four stroke petrol engine and four stroke diesel.

APPARATUS USED: - Model of Four-stroke Diesel and four stroke petrol Engines.

THEORY-

CYCLE- When series of events are repeated in order, it completes one cycle. Cycle is generally classified as Four stroke cycle and Two stroke cycle.

a) ***Four stroke cycle-*** In Four stroke cycle, four operations are required to complete one cycle. These four operations are suction, compression, power andexhaust.

ENGINE- A power producing machine is called an engine.

HEAT ENGINE- An engine which converts heat energy into mechanical energy is called a heat engine.

Types of heat engine –

a) External Combustion engine-The engine in which the combustion of fuel takesplaceoutsidethecylinderiscalledanexternalcombustionengine.

b) Internal Combustion engine- The engine in which the combustion of fuel takesplaceinsidethecylinderiscalledaninternalcombustionengine.

<u>FOUR STROKE DIESEL ENGINE</u>

Four-stroke cycle Diesel engine or Compression ignition engine or constantpressure cycle engine is meant for heavy duty applications, like heavy motor vehicles, stationarypowerplants,shipsandbigindustrialunits,trainlocomotive,tractorand bus application. In this the air compressed in the engine cylinder and fuel is injects throughinjector.

Working of the four stroke Diesel engine-

a) ***Suction Stroke-***The inlet valve opens during this stroke and only air is sucked into the engine cylinder. The exhaust valve remains closed. When the piston reaches Bottom Dead Centre (BDC), the suction stroke is completed asshowninFig.(1)andinletvalvealsocloses.

b) ***Compression Stroke-*** The piston moves from Bottom Dead Centre (BDC) to Top Dead Centre (TDC) position. Both the valves remain closed. The air drawn during suction stroke iscompressed.

c) ***Expansion or Power or Working Stroke-*** Just before the piston completes itscompressionstroke,thedieselinjectedgetsignitedandtherapid explosion takes place. The expansion of hot gases pushes the piston downto BDC position. Both the valve remains closed and the useful work is obtained from the engine.

d) ***Exhaust Stroke-*** The piston moves from BDC to TDC, the exhaust valve opens and the inlet valve remains closed. The piston pushes the exhaust gasesoutthroughtheexhaustvalvetotheatmospheretillitreachestheTDC position and the cycle iscompleted.

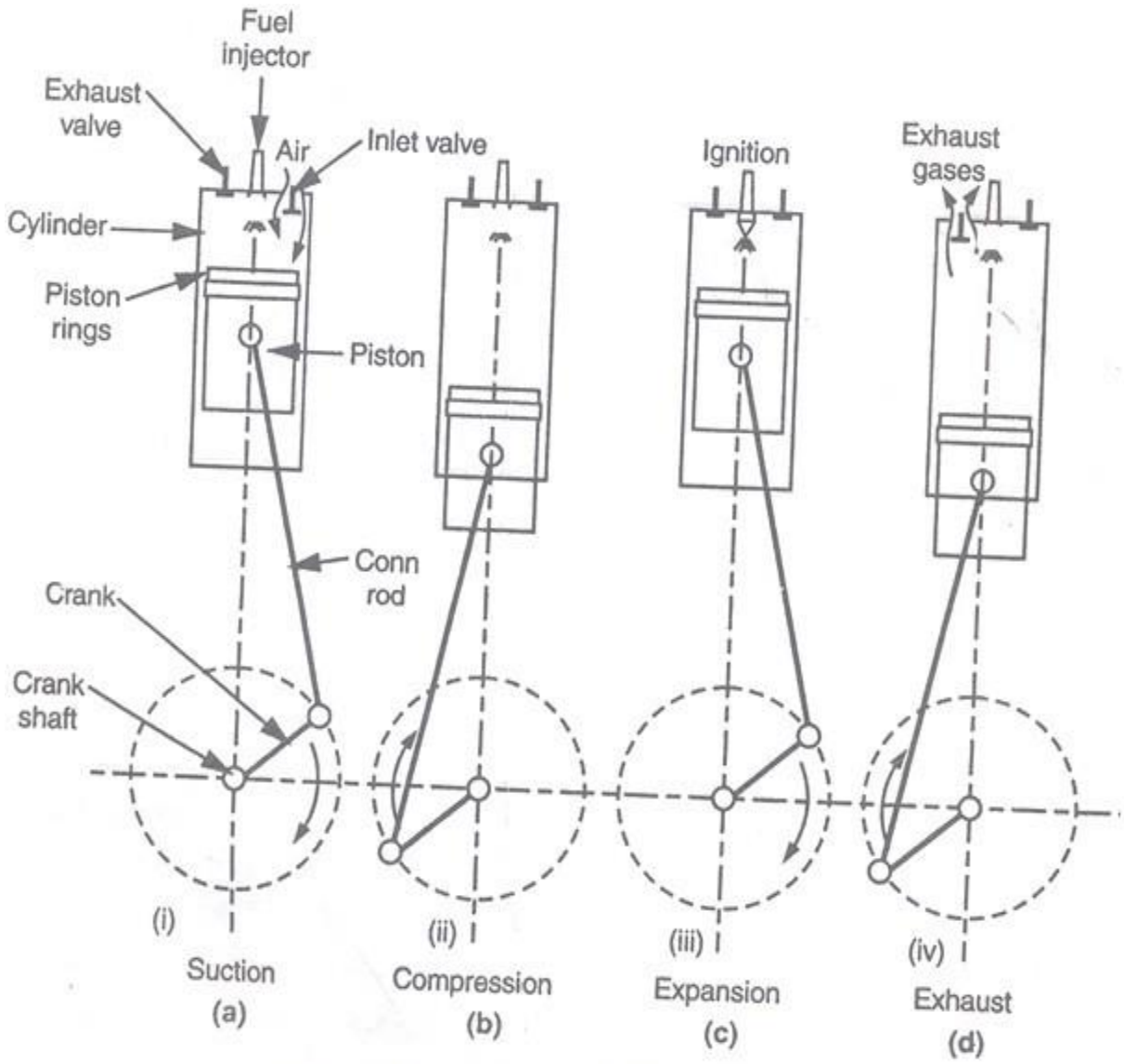

Fig- FOUR STROKE CYCLE DIESEL ENGINE

<u>FOUR STROKE PETROL ENGINE-</u>

In four stroke petrol engine or spark ignition engine all the events of the cycle i.e. suction, compression, expansion and exhaust take place in two revolutions of the crank shaft I.e. 720° of the crank rotation. Thus each stroke is of 180° crank shaft rotation. Therefore the cycle of operation for an ideal four stroke engine consists of the following four strokes:

a) ***Suction Stroke-*** The piston moves from Top Dead Centre (TDC) to Bottom Dead Centre (BDC). The inlet valve opens and a fresh charge of fuel and air mixture enters the cylinder. The exhaust valve remains closed. When the pistonreachesBottomDeadCentre(BDC),theinletvalvealsoclosed.

b) ***Compression Stroke-*** The piston moves from Bottom Dead Centre (BDC) to Top Dead Centre (TDC) position. Both the valves remain closed. The charge drawnduringsuctionstrokeiscompressedinthisstroke.

c) ***Expansion or Power or Working Stroke-*** Just before the piston completes its compression stroke, the charge is ignited by the spark plug and the rapid explosion takes place. The expansion of hot gases pushes the piston downto

BDC position. Both the valve remains closed and the useful work is obtained from the engine.

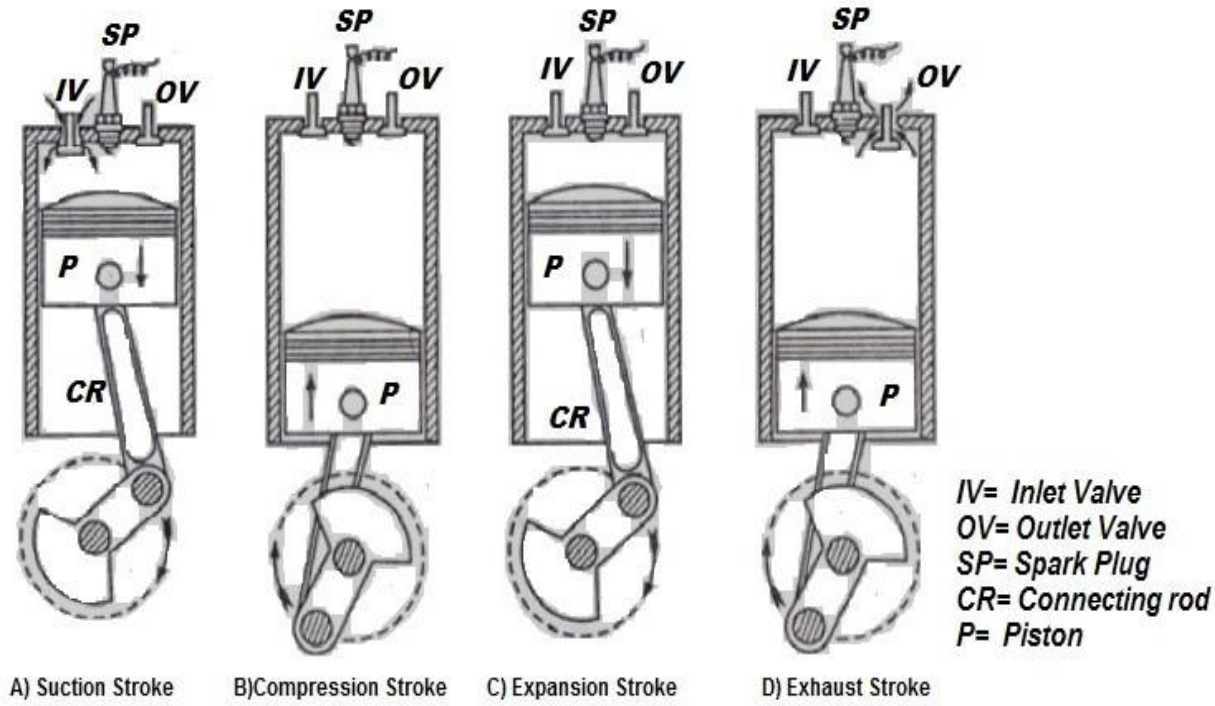

Figure- Four Stroke Petrol Engine

d) ***Exhaust Stroke-*** The piston moves from BDC to TDC, the exhaust valve opens and the inlet valve remains closed. The piston pushes the exhaust gasesoutthroughtheexhaustvalvetotheatmospheretillitreachestheTDC position and the cycle iscompleted.

AIM: - Study of working of two stroke petrol and two stroke diesel engine

with the help of cut section models**.**

APPARTUSUSED:-ModelofTwo-strokediesel &petrolEngines.

THEORY-

CYCLE- When series of events are repeated in order, it completes one cycle. Cycle is generally classified as Four stroke cycle and Two stroke cycle.

Four stroke cycle- In Four stroke cycle, four operations are required to complete onecycle.Thesefouroperationsaresuction,compression,powerandexhaust.

Two stroke cycles- In a two stroke cycle, the series of events of the working cycle is completed in two strokes of the piston and one revolution of the crankshaft. The four operations i.e. suction, compression, power and exhaust are completed during two strokes of thepiston.

ENGINE- A power producing machine is called an engine.

HEAT ENGINE- An engine which converts heat energy into mechanical energy is called a heat engine.

Types of heat engine –

a) ***External Combustion engine-***The engine in which the combustion of fuel takesplaceoutsidethecylinderiscalledanexternalcombustionengine.

b) ***Internal Combustion engine-*** *The* engine in which the combustion of fuel takesplaceinsidethecylinderiscalledaninternalcombustionengine.

<u>TWO STROKE PETROL (S.I.) ENGINE-</u>

In two stroke cycle petrol engine, there are two strokes of the piston and one revolution of the crankshaft to complete one cycle. In two stroke engines ports are used instead of valve i.e. suction port, transfer port and exhaust port. These ports arecoveredanduncoveredbytheupanddownmovementofthepiston.Thetopof the piston is deflected to avoid mixing of fresh charge with exhaust gases. The exhaust gases are expelled out from the engine cylinder by the fresh charge of fuel entering the cylinder. The mixture of air and petrol is ignited by an spark produced atthesparkplug.Thetwostrokeoftheengineare-

First Stroke- Assuming the piston to be at the BDC position. The inlet port is converted by the piston whereas the transfer port and exhaust port are uncovered. The piston moves from BDC to TDC. The air petrol mixture enters the cylinder. On the upward movement of the piston, first of all the transfer port is converted and then immediately, the exhaust port is covered. Simultaneously the suction port also

gets uncovered, the upward movement of the piston helps to compress the air fuel mixtureatthetopandcreatespartialvacuumatthebottominthecrankcasewhich gets filled with air fuel mixture by the atmospheric pressure. At the end of the stroke, the piston reaches the TDC position completing the compression stroke as shown in Fig. (a) and(b).

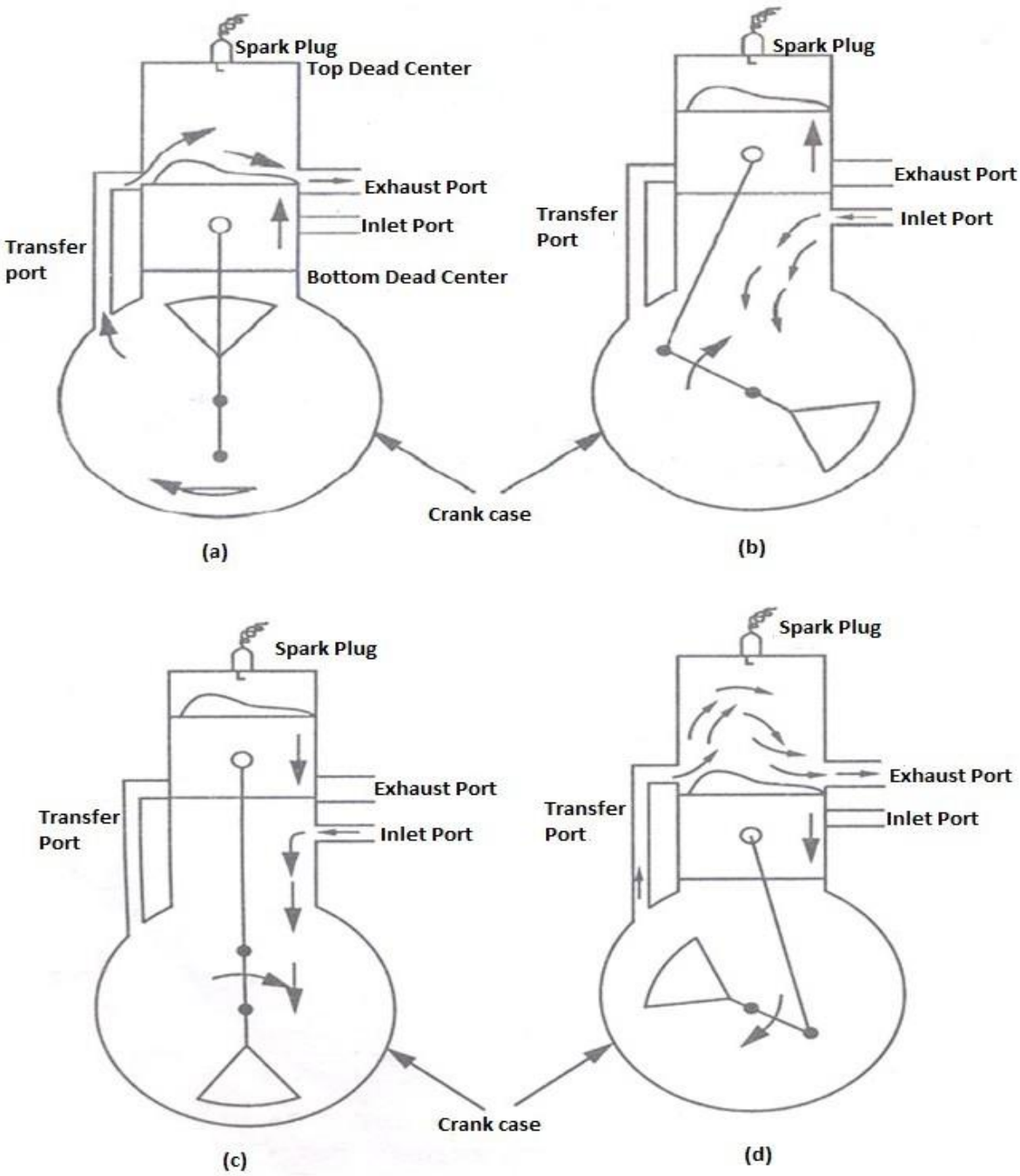

Fig-TWO STROKE CYCLE PETROL (S.I.) ENGINE-

Second Stroke- Just before the completion of the compression stroke,the compressed charge is ignited in the combustion chamber, by means of an electric spark produced by the spark plug. Combustion of air fuel mixture pushes thepiston in the downward direction, on the power stroke producing useful work. The movement of the power action is over, the exhaust port is uncovered. The exhaust gases escape to the atmosphere. Further movement of the piston covers the inlet port and the fresh charge is compressed in the crankcase. Simultaneously the transfer port is also uncovered. The compressed mixture of air fuel enters the combustion chamber. The deflected shape of the

piston avoids inter-mixing of the fresh charge and exhaust gases i.e. the fresh charge rises to the top of the cylinder and pushes out most of the exhaust gases. Thus the three actions, power, exhaust and induction are completed from TDC to BDC position completing one cycle i.e. two stroke of the piston and one revolution of the crankshaft as shown in Fig. (c) and(d).

TWO STROKE DIESEL (C.I. ENGINE-)

The working principle of a two stroke diesel engine is discussed below:

***I st stroke*:** To start with let us assume the piston to be at its B.D.C. position (Fig. a). The arrangement of the ports is such that the piston performs the two jobs simultaneously.

AsthepistonstartsrisingfromitsB.D.C.position,ifclosesthetransferportandthe exhaustport.Theairwhichisalreadythereinthecylinderiscompressed(Fig.b).

At the same time with the upward movement of the piston, vacuum is created in the crank case. As soon as the inlet port is uncovered, the fresh air is sucked in the crank case. The charging is continued until the crank case and the space in the cylinderbeneaththepistonisfilled(Fig.c)withtheair. Attheendofthestroke,the piston reaches the T.D.C.Position.

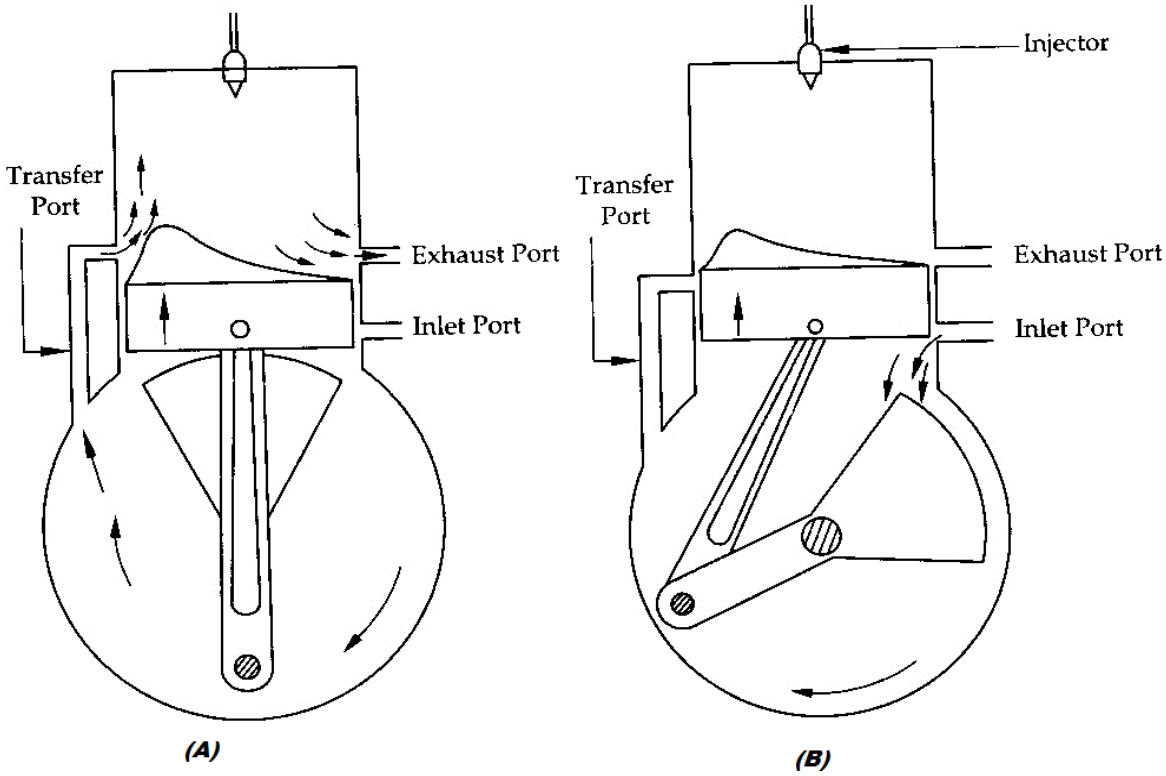

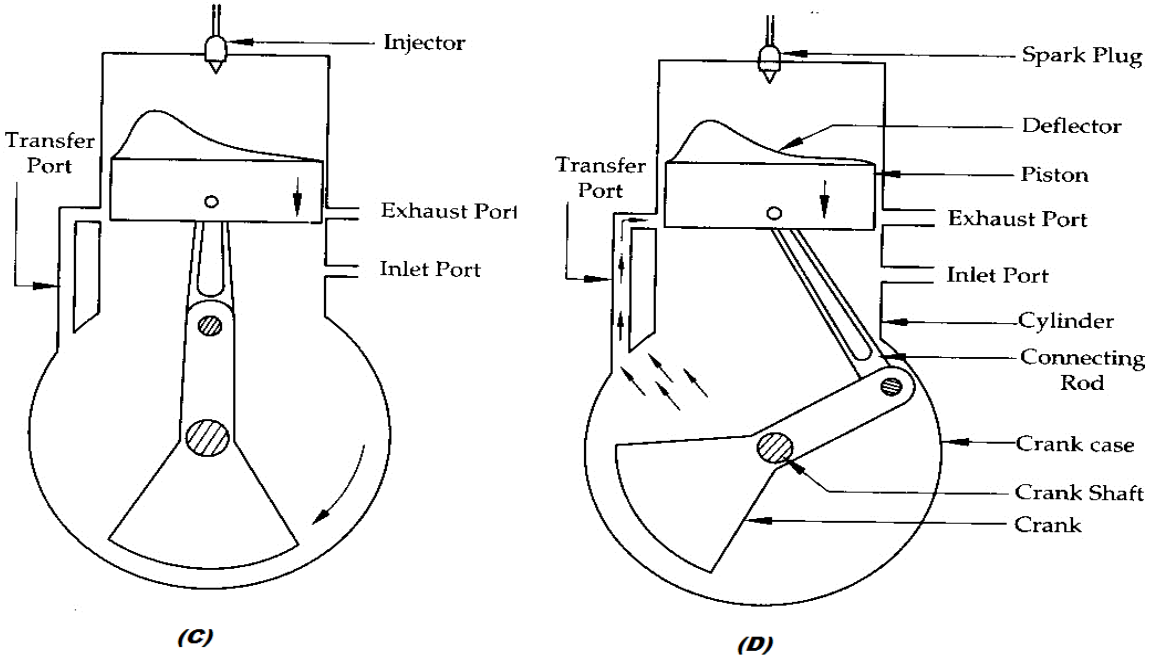

Figure- Working Principle of 2-stroke Diesel Engine

2nd stroke: Slightly before the completion of the compression stroke, a very fine sprays of diesel injected into the compressed air. The fuel ignites spontaneously.

Pressure is exerted on the crown of the piston due to the combustion of the air and the piston is pushed in the downward direction producing some useful power (Fig. c). The downward movement of the piston will first close the inlet port and then it will compress the air already sucked in the crank case.

Just the end of power stroke, the piston uncovers the exhaust port and the transfer port simultaneously. The expanded gases start escaping throughthe exhaustportandatthesametimetransferport(Fig.d)andthusthecycleis repeatedagain.

The fresh air coming into the cylinder also helps in exhausting the burnt gases out of the cylinder through the exhaust port (Fig. d). This is known as scavenging.

AIM: To draw valve timing diagram for a single cylinder diesel engine.

Valve timing diagram for 4 stroke system

Theoretically it may be assumed that the valves open and close and the spark (or injection of fuel)occurs at the engine dead centers. However, in actual operation, the valves do not operate at dead center positions but operate some degree on either side of the dead centers. The opening occurs earlier and the exhaust continues even at later crank angles. The ignition is also timed to occur in advance of the completion of compression stroke.

The timing of these events, referred in terms of crank angles from dead center positions, is represented on a valve timing diagram. The correct timings are of fundamental importance for the efficient and successful running of the I.C. engine.

Valve Timing Diagram For Petrol Engine

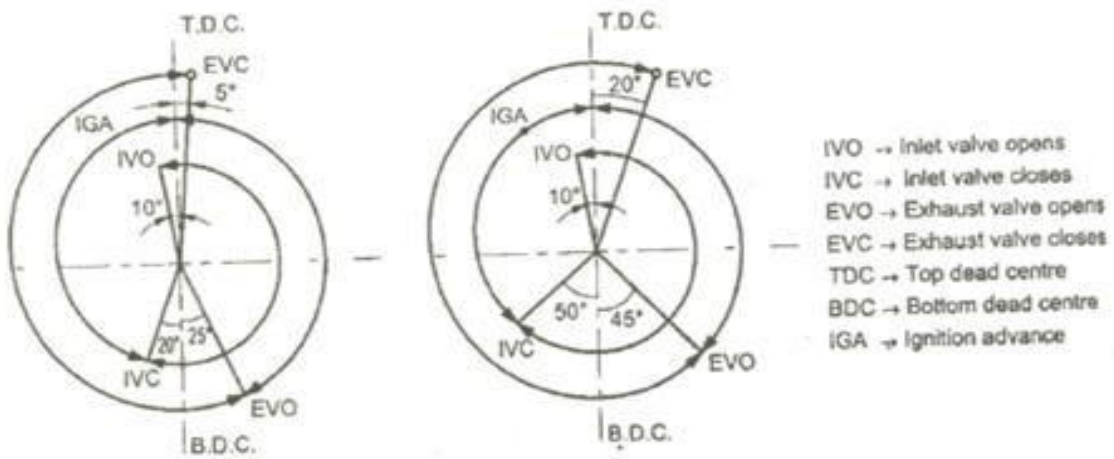

Low Speed Petrol Engine **High Speed Petrol Engine**

1. **Inlet valve:**Due to inertia effect and the time required in attaining full opening, the inlet valve is made to open somewhat earlier than TDC so that by the time the piston reaches TDC, the valve is fully open. For an engine running at low speed and with throttle opening, there is vacuum in the cylinder throughout the intake strike and on the completion of the strike the cylinder is almost filled withcharge

at atmospheric pressure. However, majority of I.C. engines run at tremendous speeds. Consequently during suction stroke the piston will reach the BDC Before the charge could get enough time to enter the cylinder through the inlet valve passages. Moreover, there is considerable resistance to the flow of charge through the air cleaner. Inlet and ports.This means that if the inlet valve is closed at BDC the cylinder by each cycle would receive charge less than its capacity and the pressure inside the cylinder would remain somewhat less than theatmosphere.

Consequently, in actual operation, inlet valve is kept open the cylinder pressure equals the atmospheric pressure. It may app. The inlet valve is open even during compression, some of the charge may be sent back to the induction pipe. On the contrary, the kinetic energy of the air fuel mixture (or air) produces the ramming effect which enables more charge to enter the cylinder. Theoretically it may be possible to induce charge more than volume capacity of the combustion space.

The greater charge sucked in by opening the inlet valve before TDC. and closing it 40-45^0 after BDC increases the potential output of the engine.

2. **Ignition (or injection):**The TDC would be proper time to produce spark if the charge could burn instantaneously. However, there is lag between the timing of spark and that of actual ignition. For best result with regard to power and economy, and to avoid explosion knock, the ignition of charge is timed to occur as early as the engine permits. At higher speeds the ignition timing is called ignitionadvance.

With too early ignition, the complete ignition may occur before the piston reaches the TDC and this may cause back explosion. The back explosion will cause the engine to run in the reversed direction of rotation.

In diesel engines, too, there is a brief interval of time for the fuel oil to mix with the hot compressed air in the cylinder and ignite. The injection of fuel is timed to occur about 10-15^{0}C before TDC. so that by the time the piston reaches TDC the actual combustion of fuel starts.

3. **Exhaust valve:**The scavenging period (period available for discharge of burnt gases) is increased by opening the exhaust valve in advance i.e. before BDC. and closing it with delay, i.e. after TDC Earlier opening makes it possible for the exhaust gases to leave by virtue of their pressure being higher than the atmosphere. During late closure, the kinetic energy of fresh charge is utilized to assist in the maximum exhausting cylinder. Thus scavenging is being obtained is being obtained at the cost of power from the expansion stroke. All the same a greater portion of the burnt gases is exhausted and this reduces the among of the work to be done by the piston on the returnstroke.

The Valve timing diagrams for four -stroke petrol engine and diesel engine are shown in Figure. The values of the angular positions quoted are only average one and considerable difference exists with different engines. Further the timings area function of the engine speed. When the engine is to run faster, the inlet valve is made to close. The exhaust valve opens earlier and the ignition (injection) is Occur earlier.

It may be seen that for some part of the cycle near TDC both the valves are open and this period is called overlap.

Valve Timing Diagram for Diesel Engines

- The valve timing diagram for actual engine is shown in fig. For a typical dieselengine.
- The various strokes are modified for similar reasons as explained in case of petrol engine.

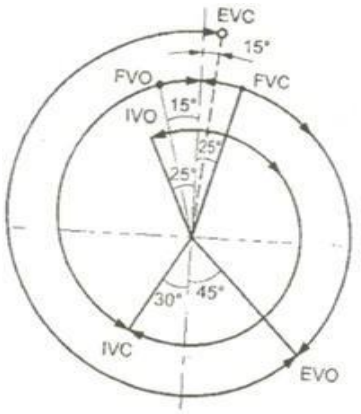

IVO – 25° before T.D.C.
IVC – 30° after B.D.C.
EVO – 45° before B.D.C.
EVC – 15° after T.D.C.
FVO – Fuel valve opens 15° before T.D.C.
FVC – Fuel valve close 25° after T.D.C.

Valve timing diagram of a Diesel Engine

Fuel Injection timing:

- The fuel needs to be injected few degrees before T.D.C. for better evaporation and mixing of fuel and air.
- The fuel valve is closed few degrees after T.D.C. as shown in fig.
- Valve timings have to be adjusted depending upon the speed of the engine. Usual timing are as follows:

Inlet valve opens (IVO) – 10° to 25° before T.D.C.
Inlet valve closes IVC – 25° to 50° after B.D.C.
Fuel Injection starts (FVO) – 5° to 10° before T.D.C.
Fuel injection stops (FVC) – 15° to 25° after T.D.C.
Exhaust valve opens (EVO) – 30° to 50° before B.D.C.
Exhaust valve closes (EVC) – 10° to 15° after T.D.C.

AIM:-Study of various types of boilers.

Theory:-

Boiler: - A steam boiler is a closed vessel in which steam is produced from water by combustion of fuel.

Classification of Boiler:

Boilers are classified on the basis of following-

1. According to contents in theTube:

a) Fire tube boiler: In fire tube boilers, the flue gases pass through the tube and water surroundthem.

B).Water tube boiler: In water tube boiler, water flows inside the tubes andthehotfluegasesflowoutsidethetubes.

2. According to the pressure ofsteam:

A).Low pressure boiler: A boiler which generates steam at a pressure of below 80 bars is called low pressure boiler. Example-Cochran boiler, Lancashire boiler etc.

B).High pressure boiler: A boiler which generates steam at a pressure higher then 80 bar is called high pressure boiler. Example- Babcock and Wilcox boileretc.

3.According to method of circulation ofwater:

A).Natural Circulation: In natural circulation boiler, circulation of water due to gravity or the circulation of water takes place by natural convection current produced by the application of heat, example-Babcock and Wilcox boiler, Lancashire boileretc.

B).Forced Circulation: In the forced circulation boiler, circulation of water byapumptoincreasethecirculation.Example-Lamontboileretc.

4. According to the Position of thefurnace:

A).Internally fired boilers: In this, the furnace is located inside the boiler shell. Example-Cochran, Locomotive and Lancashireboilers.

B).Externally fired boilers: In this, the furnace is located outside the boiler shell. Example-Babcock and Wilcox boileretc.

1. According to the axis ofshell:

A).Vertical boilers: If the axis of the shell of boiler is vertical so the boiler is called as verticalboiler.

B).Horizontal boilers: If the axis of the shell of boiler is horizontal so the boiler is called as Horizontal boilers.

C***).Inclined boilers:*** If the axis of the shell of boiler is Inclined so the boiler is called as Inclinedboiler.

COCHRAN BOILER:

Cochran boiler is a vertical, multitubular fire tube, internally fired, natural circulation boiler.

Construction:

Figure shows a Cochran boiler. It consists of a vertical cylindrical shell having a hemispherical top and furnace is also hemispherical inshape.Thefiregrateisarrangedinthefurnaceandtheashpitisprovided below the grate. A fire door is attached on the fire box. Adjacent to the fire box, the boiler has a combustion chamber which is lined with fire bricks. Smoke or fire tubes are provided with combustion chamber. These tubes are equal in length and arranged in a group with wide space in between them. The ends of these smoke tubes are fitted in the smoke box. The chimney is provided at the top of the smoke box for discharge of the gases to the atmosphere. The furnace is surrounded by water on all sides except at the opening for the fire door and the combustion chamber. The smoke tubes are also completely surrounded bywater.

Different boiler mountings and accessories are located at their proper place.

Working:

Thehotgasproducedfromtheburningofthefuelonthegrate risesupthroughthefluepipeandreachesthecombustionchamber.Theflue gasesfromthecombustionpassthroughthefiretubesandthesmokebox and finally are discharged through the chimney. The flue gases during their travel from fire box to the chimney gives heat to the surrounding water to generate steam.

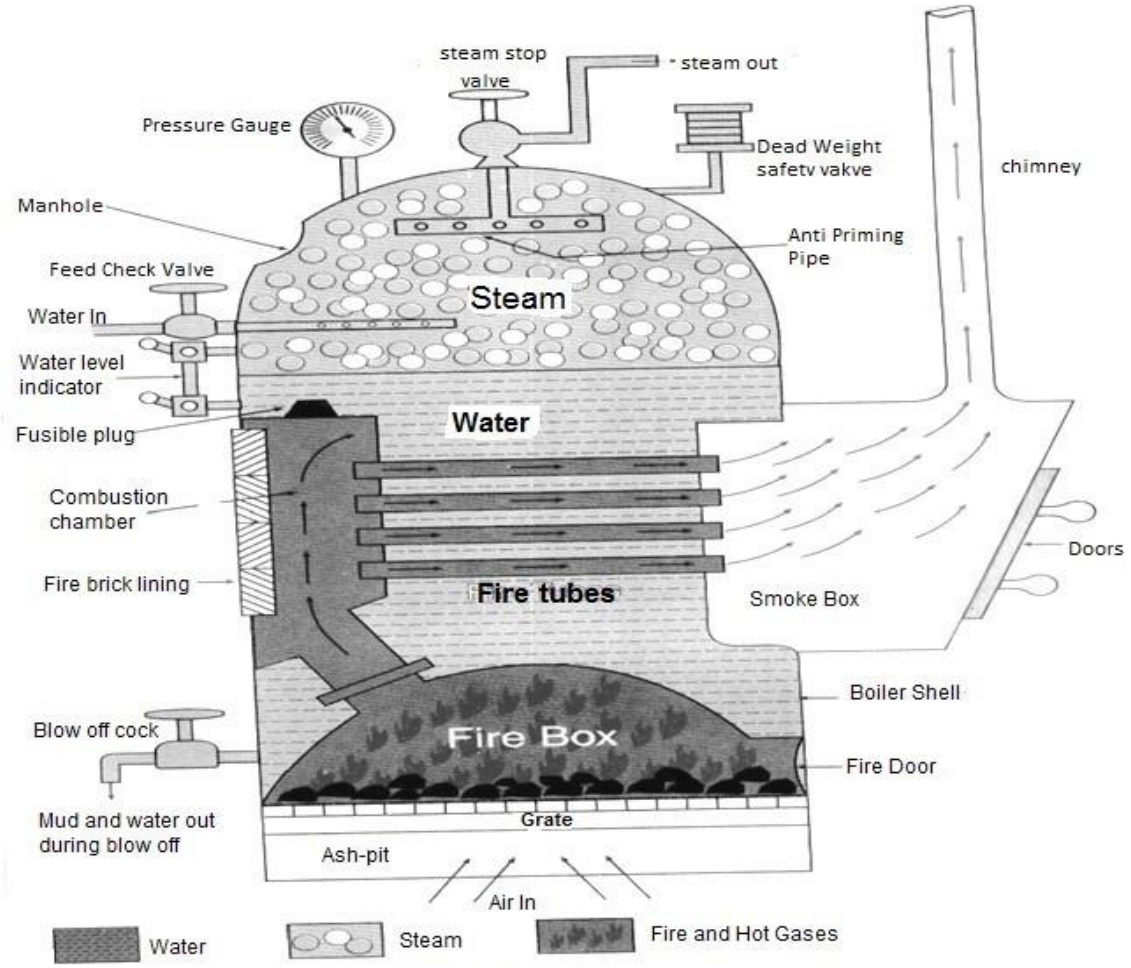

COCHRAN BOILER

Specification of CochranBoiler:

Diameter of the drum	→	0.9m to 2.75m
Steam pressure	→	6.5bar up to 15bar
Heating surface	→	120m^2
Maximum evaporative capacity	→	4000Kg/hr of steam
Height of the shell	→	5.79m

No of tubes	→	165
External diameter of flue tube	→	62.5mm
Efficiency	→	70to 75%

BABCOCK AND WILCOX BOILER:

Babcock and Wilcox boiler is a horizontal shell, multitubular, water tube, externally fired, natural circulation boiler.

Construction: Figure shows the details of a Babcock and Wilcox water tube boiler. It consists of a drum mounted at the top and connected by upper header and down take header. A large number of water tubes connect the uptakeanddowntakeheaders.Thewatertubesareinclinedatanangleof5 to15degreestopromotewatercirculation.Theheatingsurfaceoftheunitis the outer surface of the tubes and half of the cylindrical surface of thewater drum which is exposed to fluegases.

Belowtheuptakeheaderthefurnaceoftheboilerisarranged.Thecoalisfed to the chain grate stoker through the fire door. There is a bridge wall deflector which deflects the combustion gases upwards. Bafflesare arranged across the water tubes to act as deflectors for the flue gases and to provide them with gas passes. Here, two baffles are arranged which provide three passes of the flue gases. A chimney is provided for the exit of the gases. A damper is placed at the inlet of the chimney to regulate the draught. There are superheating tubes for producing superheated steam. Connections are provided for other mounting andaccessories.

Working:

The hot combustion gases produced by burning of fuel on the grater rise upwardsandaredeflectedbythebridgewalldeflectortopassoverthefront portion of water tubes and drum. By this way they complete the first pass. Withtheprovisionofbafflestheyaredeflecteddownwardsandcompletethe second pass. Again, with the provision of baffles they rise upwards and complete the third pass and finally come out through the chimney. During their travel they give heat to water and steam is formed. The flow path of the combustion gases is shown by the arrows outside the tubes. The circulation of water in the boiler is due to natural circulation set-up by convective currents (due to gravity). Feed water is supplied by a feed check valve.

The hottest water and stem rise from the tubes to the uptake header and then through the riser it enters the boiler drum. The steam vapours escape through the upper half of the drum. The cold water flows from the drum to the rear header and thus the cycle is completed.

To get superheated steam, the steam accumulated in the steam space is allowed to enter into the super heater tubes which are placed above the watertubes.Thefluegasespassingoverthefluetubesproducesuperheated steam. The steam thus superheated is finally supplied to the user through a steam stopvalve.

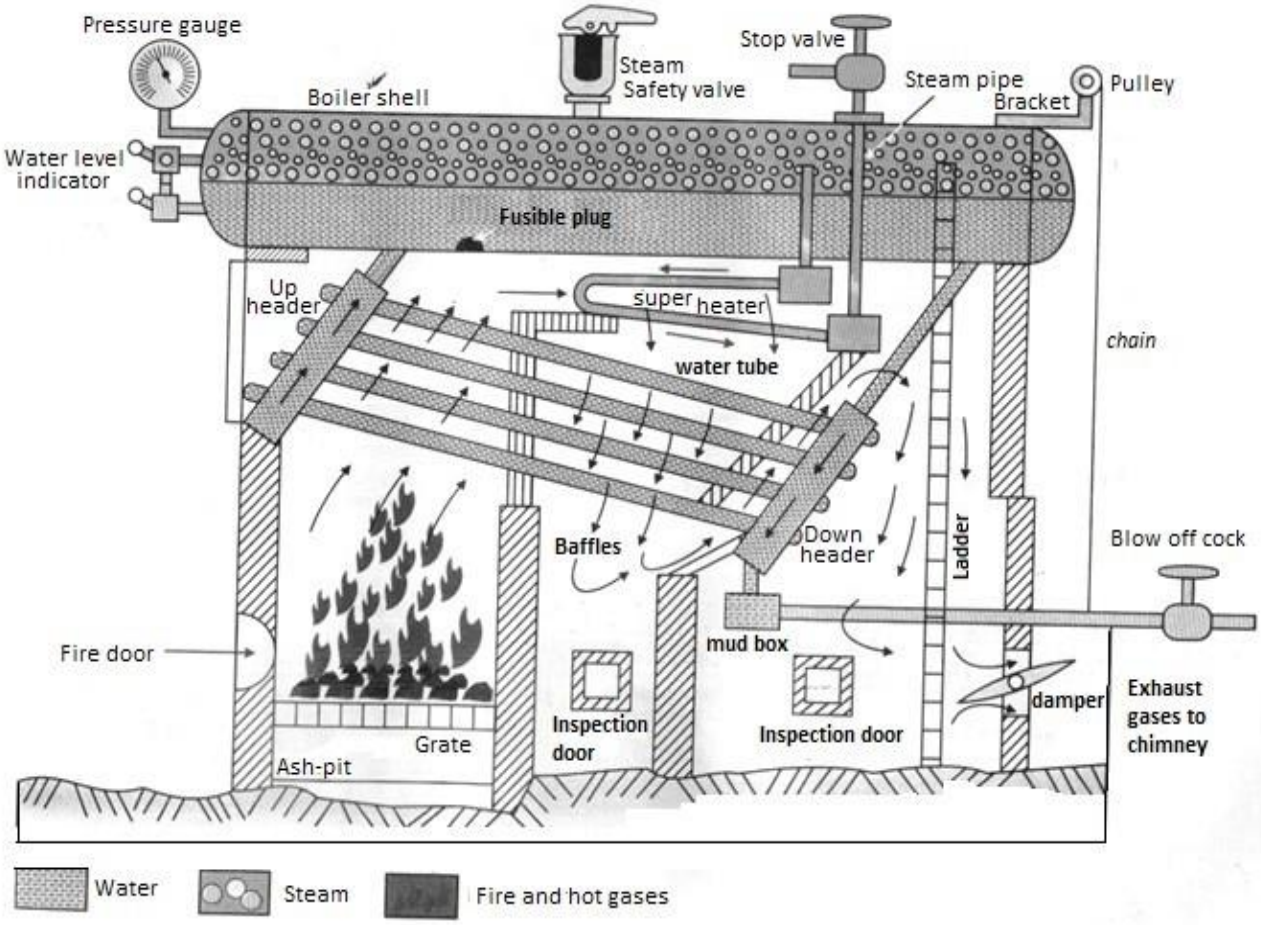

Babcock and Wilcox Boiler

Specification of Babcock and Wilcox Boiler:

Diameter of the drum	→	1.22 m to 1.83 m
Length of the drum	→	6.096 to 9.144 m
Size of water tubes	→	7.62 to 10.16 cm
Size of super heater tube	→	3.84 to n5.71 cm
Working pressure	→	100bar
Steaming capacity (Maximum)	→	40,000Kg/hr
Efficiency	→	60 to 80%

Aim: To study and prepare repot on the constructional details, working principles and operation of Automotive Brake Systems.

Theory

Labelled Diagram, Constructional Details, Working Principle and Operation of the above Steering Systems

PRINCIPLE

It goes without saying that brakes are one of the most important control components of vehicle. They are required to stop the vehicle within the smallest possible distance and this is done by converting the kinetic energy of the vehicle into the heat energy which is dissipated into the atmosphere.

BRAKING REQUIREMENTS

1 The brakes must be strong enough to stop the vehicle within a minimum distance in an emergency. But this should also be consistent with safety. The driver must have proper control over the vehicle during emergency braking and the vehicle must not skid.

2 The brakes must have good antifade characteristics i.e. their effectiveness should not decrease with constant prolonged application e.g. while descending hills. This requirement demands that the cooling of the brakes should be very efficient.

HYDRAULIC BRAKES

Most of the cars today use hydraulically operated foot brakes on all the four wheels with an additional hand brake mechanically operated on the rear wheels. An outline of the hydraulic braking system is shown in fig. the main component in this is the master cylinder which contains reservoir for the brake fluid. Master cylinder is operated by the brake pedal and is further connected to the wheel cylinders in each wheel through steel pipe lines, unions and flexible hoses. In case of Hindustan Ambassador car, on front wheels each brake shoe is operated by separate wheel cylinder (thus making the brake two shoe leading) whereas in case of rear wheels there is only one cylinder on each wheel which operates both the shoes (thus giving one leading and one training shoe brakes.) As the rear wheel cylinders are also operated mechanically with the hand brake, they are made floating. Further, all the shoes in the Ambassador car are of the floating anchor type.

The system is so designed that even when the brakes are in the released position, a small pressure of about 50 kPa is maintained in the pipe lines to ensure that the cups of the wheel cylinder are kept expanded. This prevents the air from entering the wheel cylinders when the brakes are released. Besides, this pressure also serves the following purposes.

(i) it keeps the free travel of the pedal minimum by opposing the brake shoe retraction springs.

(ii) During bleeding, it does not allow the fluid pumped into the line to return, thus quickly purging air from the system.

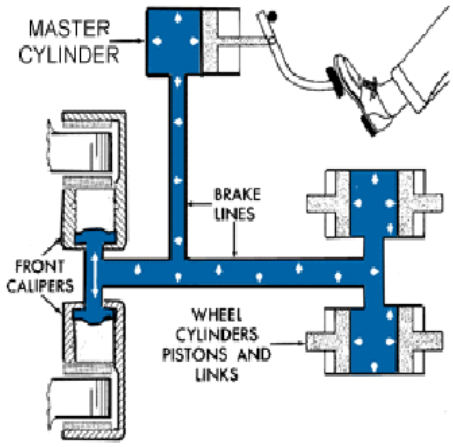

DRUM BRAKES

In this type of brakes, a brake drum is attached concentric to the axle hub whereas on the axle casing is mounted a back plate. In case of front axle, the back plate is bolted to the steering knuckle. The back plate is made of pressed steel sheet and is ribed to increase rigidity and to provide support for the expander, anchor and brake shoes. It also protects the drum and shoe assembly from mud and dust. Moreover, it absorbs the complete torque reaction of the shoes due to which reason it is sometimes also called torque plate. Two brake shoes are anchored on the back plate as shown in fig. Friction linings are mounted on the brake shoes. One or two retractor springs are used which serve to keep the brake shoes away from the drum when the brakes are not applied. The brake shoes are anchored at one end, whereas on the other ends force F is applied by means of some brake actuating mechanism which forces the brake shoe against the revolving drum, thereby applying the brakes. An adjuster is also provided to compensate for wear of friction lining with use. The relative braking torque obtained at the shoes for the same force applied at the pedal varies depending upon whether the expander (cam or toggle lever) is fixed to the back plate or it is floating, whether the anchor is fixed or floating and whether the shoes are leading or trailing.

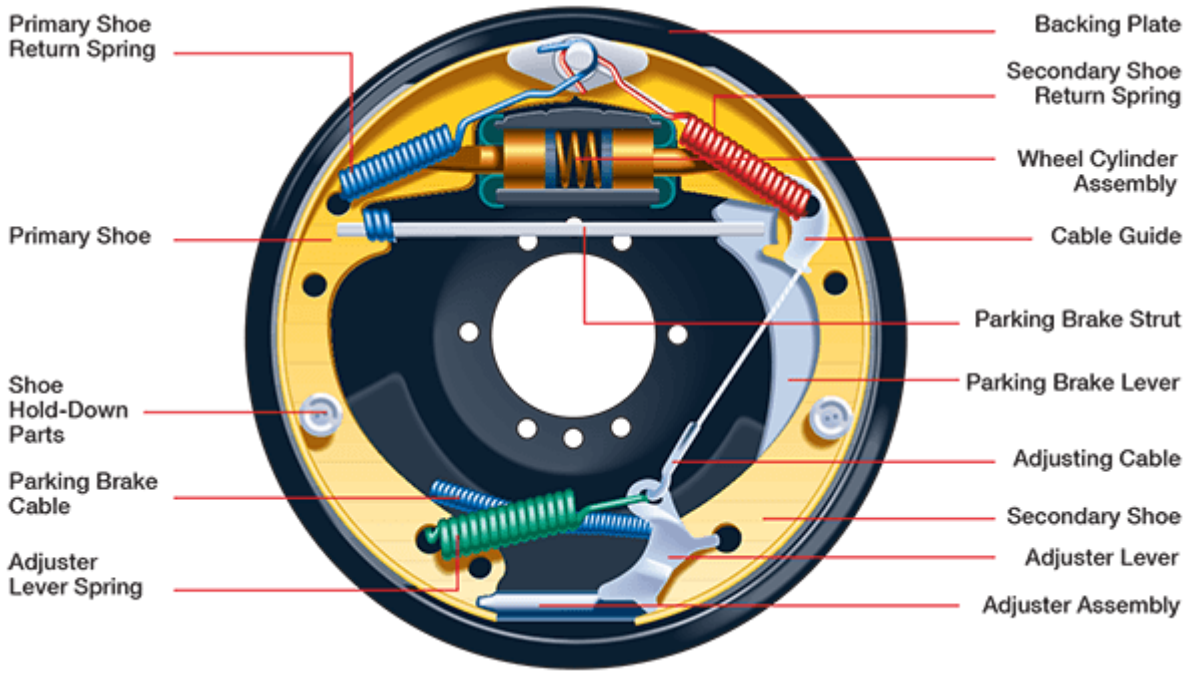

The whole assembly of the drum brake is fitted to the back plate of the wheel. The back plate remains stationary and it does not rotates with the wheel.

1. Brake Drum:
It is a round cast iron housing which is used to stop the vehicle with the help of brake shoe. The drum brake is bolted to the hub of the wheel. It rotates with the hub.

2. Brake Shoe:
It is the frictional part of the drum brake, without it the working of the brake is not possible. The brake shoe has brake lining at its outer curve. It is the brake lining which makes contact with brake drum during the stopping of the vehicle. It is of two types

(i) Primary Brake Shoe: The shoe having large lining material is called as primary shoe.
(ii) Secondary brake shoe: The shoe with small lining material is called secondary shoe.
3. Wheel Cylinder:
It is used to force the brake shoe outward to apply the brake. The wheel cylinder is connected to the master cylinder. It contains piston which moves outward when brake is applied and forces the brake shoe towards inner surface of the drum.

4. Return or Retracting Spring:
It is used to retract the brake shoe after brake is applied. Two return springs are there in durm brake, one for the primary shoe and other one is for secondary shoe.

5. Self Adjuster:
It maintain the minimum gap between the brake shoe and drum so that they do not contact each other when pedal is not pressed. In the case if the brake lining wear out, and gap increases in between the shoe and drum, It can be adjusted again to maintain the gap between shoe and drum inner surface. once it is adjusted it maintains the same gab during the brake working by itself.

Working Principle

The brake shoe is allowed to expand in both the direction. As the brake lining of shoe touches the inner surface of the drum, friction is generated in between the brake shoe and drum and stops the vehicle from moving.

Working of Drum Brakes

1. As the brake pedal is pressed, it compresses the fluid in the master cylinder and allows the piston of the wheel cylinder to expand outward.

2. The outward motion of the piston of wheel cylinder forces the brake shoe outward against the brake drum.

3. As the brake shoe lining touches the inner surface of the drum, and due to the friction generated in between the brake shoe and drum, the motion of the wheel reduces and vehicle stops.

4. As the force is removed from the brake pedal, the retracting springs draws the brake shoe inward and the contact between the friction lining and drum ended. Now again the brake is ready to apply.

5. A self adjusting screw is present at the bottom, which is used to maintain a minimum gap between the drum and brake shoe. When the lining of the brake shoe is wear out than the gap between the drum and brake shoe increases, at that time the adjuster is adjusted again to maintain the minimum gap

DISC BRAKES

As shown in fig. a disc brake consists of a cast iron disc bolted to the wheel hub and a stationary housing called caliper. The caliper is connected to some stationary part of the vehicle, like the axle casing or the sub axle and is cast in two parts, each part containing a piston. In between each piston and disc, there is friction pad held in position by retaining pins, spring plates etc. Passages are drilled in the caliper for the fluid to enter or leave each housing. These passages are also connected to another one for bleeding. Each cylinder and contains a rubber sealing ring between the cylinder and the piston.

When the brakes are applied, hydraulically actuated pistons move the friction pads into contact with the disc, applying equal and opposite forces on the later. On releasing the brakes, the rubber sealing rings act as return springs and retract the pistons and the friction pads away from the disc.

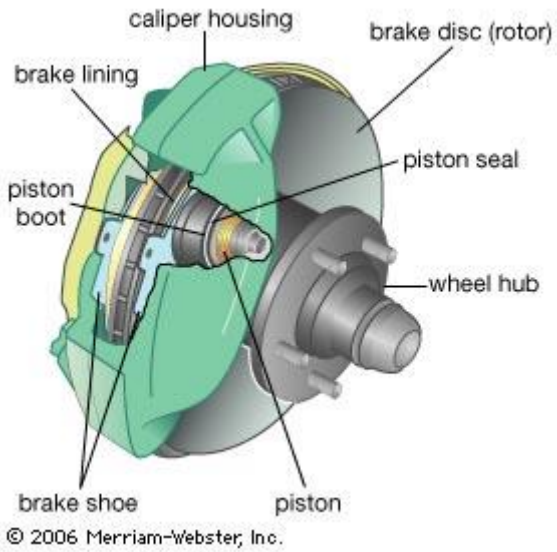

The disc brake is a lot like the brakes on a bicycle. Bicycle brakes have a caliper, which squeezes the brake pads against the wheel. In a disc brake, the brake pads squeeze the **rotor** instead of the wheel, and the force is transmitted hydraulically instead of through a cable. Friction between the pads and the disc slows the disc down.

A moving car has a certain amount of kinetic energy, and the brakes have to remove this energy from the car in order to stop it. How do the brakes do this? Each time you stop your car, your brakes convert the kinetic energy to heat generated by the friction between the pads and the disc. Most car disc brakes are **vented**.

Disc brake vents

Vented disc brakes have a set of vanes, between the two sides of the disc, that pumps air through the disc to provide **cooling**.

For a brake of this type

$T = 2\mu paR$

Where

μ = coefficient of friction

p = fluid pressure

a = cross sectional area of one piston

R = distance of the longitudinal axis of the piston from the wheel axis

AIM: Study of transmission system including clutches, gear box assembly and differential

Theory:

Transmission system: Transmission system in a car helps to transmit mechanical power from the car engine to give kinetic energy to the wheels. It is an interconnected system of gears, shafts, and other electrical gadgets that form a bridge to transfer power and energy from the engine to the wheels. The complete set up of the system helps to maintain the cruising speed of the car without any disturbance to the car's performance. The oldest variant of the transmission system in India is the manual transmission that has undergone various modifications and alterations to form the present day automatic transmission.

Clutch: The clutch helps to disengage the engine from the manual gearbox (transmission) for changing of the gears. The clutch consists of the flywheel, clutch plate, pressure plate, clutch pedal and, depending on the car, either a cable or hydraulic (fluid) linkage to engage/disengage the clutch

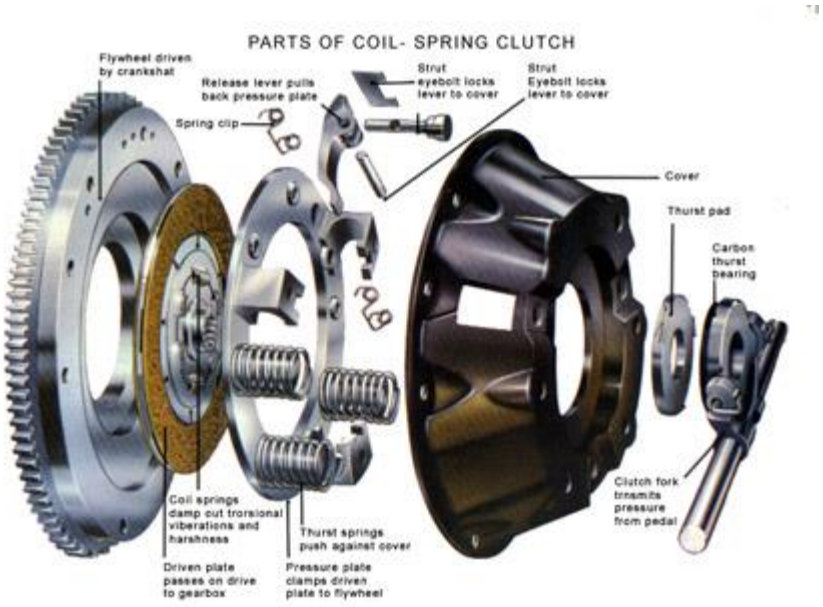

Driving the automobile with your foot on the clutch pedal, once you have changed the gear, can cause premature failure of the clutch and unnecessary expense to your pocket. Keep in mind, the quality of workmanship carried out in the automobile factories/assembly plants can never be repeated by the workshops. Riding the clutch is a common fault with many drivers in Pakistan. Whenever I take the test of a driver the first thing I check is if he is riding the clutch.

By riding your manual car clutch, you cause slippage of the clutch plate between the flywheel and the pressure plate. This wears out the clutch plate. The first thing you will notice is that the clutch pedal free play is no more and your fuel consumption has gone up. You can adjust the clutch pedal free play and continue to use the car.

If you want to check the clutch system, apply the parking brake, depress the clutch pedal and put the gear lever in 3rd gear. While increasing the engine RPMs, slowly let go the clutch pedal. If the engine stalls and eventually shuts off, it means your clutch plate is working fine. Whereas, if the engine keeps running, and you notice RPM increasing when you press the throttle, it means that the clutch system requires dis-assembly and parts replaced accordingly.

Gear box:

A transmission or gearbox provides speed and torque conversions from a rotating power source to another device using gear ratios. The transmission reduces the higher engine speed to the slower wheel speed, increasing torque in the process. A transmission will have multiple gear ratios (or simply "gears"), with the ability to switch between them as speed varies. This switching may be done manually (by the operator), or automatically. Directional (forward and reverse) control may also be provided.

In motor vehicle applications, the transmission will generally be connected to the crankshaft of the engine. The output of the transmission is transmitted via driveshaft to one or more differentials, which in turn drive the wheels.

Most modern gearboxes are used to increase torque while reducing the speed of a prime mover output shaft (e.g. a motor crankshaft). This means that the output shaft of a gearbox will rotate at slower rate than the input shaft, and this reduction in speed will produce a mechanical advantage, causing an increase in torque.

Main components of a gear box:

In any device two or more component works together and fulfills the required function. In a transmission box four components are required to fulfill its function. These components are-

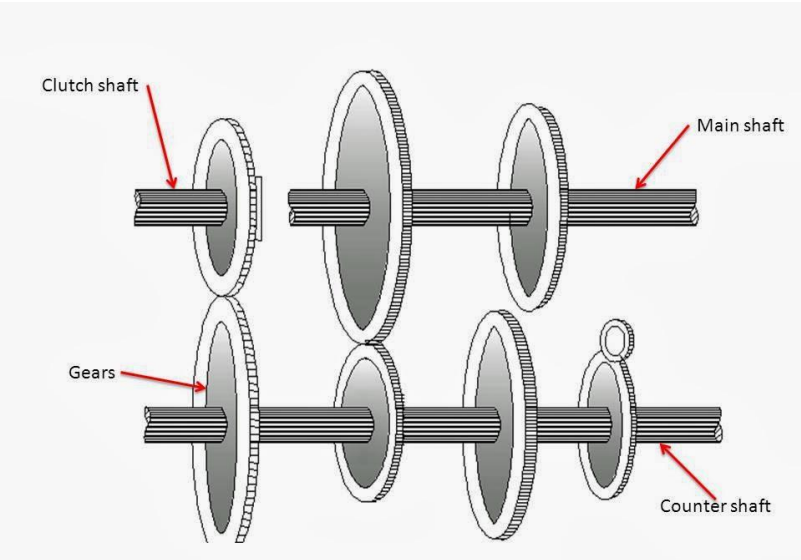

Main parts of gear box

1. Counter shaft:

Counter shaft is a shaft which connects with the clutch shaft directly. It contains the gear which connects it to the clutch shaft as well as the main shaft. It may be run runs at the engine speed or at lower than engine speed according to gear ratio.

2. Main shaft:

It is the shaft which runs at the vehicle speed. It carries power form the counter shaft by use of gears and according to the gear ratio, it runs at different speed and torque compares to counter shaft. One end of this shaft is connects with the universal shaft.

3. Gears:

Gears are used to transmit the power form one shaft to another. They are most useful component of transmission box because the variation is torque of counter shaft and main shaft is depend on the gear ratio. The gear ratio is the ratio of the driven gear teeth to the driving gear teeth. If gear ratio is large than one, the main shaft revolves at lower speed than the counter shaft and the torque of the main shaft is higher than the counter shaft. On other hand if the gear ratio is less than one, than the main shaft revolves at higher speed than the counter shaft and the torque of the main shaft is lower than the counter shaft. A small car gear box contains four speed gear ratio and one reverse gear ratio.

4. Bearings:

Whenever the rotary motion, bearings are required to support the revolving part and reduce the friction. In the gear box both counter and main shaft are supported by the bearing.

Working of a principle gear box:
In a gear box, the counter shaft is mashed to the clutch with a use of a couple of gear. So the counter shaft is always in running condition. When the counter shaft is bring in contact with the main shaft by use of meshing gears, the main shaft start to rotate according to the gear ratio. When want to change the gear ratio, simply press the clutch pedal which disconnect the counter shaft with engine and change connect the main shaft with counter shaft by another gear ratio by use of gearshift lever. In an gear box, the gear teeth and other moving metal must not touch. They must be continuously separated by a thin film of lubricant. This prevents excessive wear and early failure. Therefor a gearbox runs partially filled with lubricant oil.

Differential: Wheels receive power from the engine via a drive shaft. The wheels that receive power and make the vehicle move forward are called the drive wheels. The main function of the differential gear is to allow the drive wheels to turn at different rpms while both receiving power from the engine.

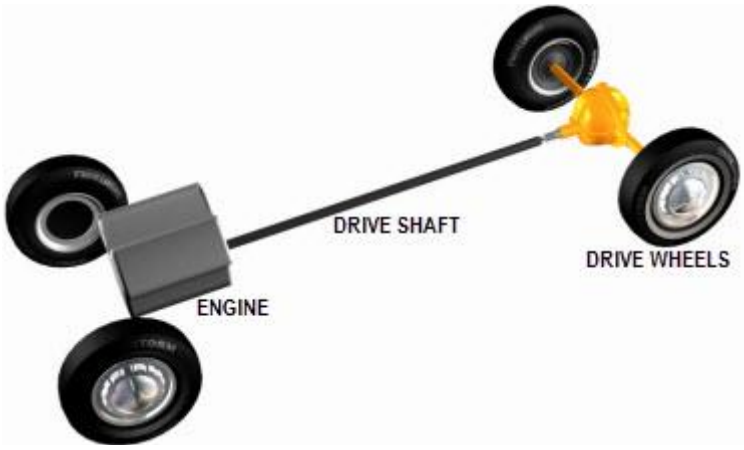

Fig.1 Power from the engine is flowed to the wheels via a drive shaft

Consider these wheels, which are negotiating a turn. It is clear that the left wheel has to travel a greater distance compared to the right wheel.

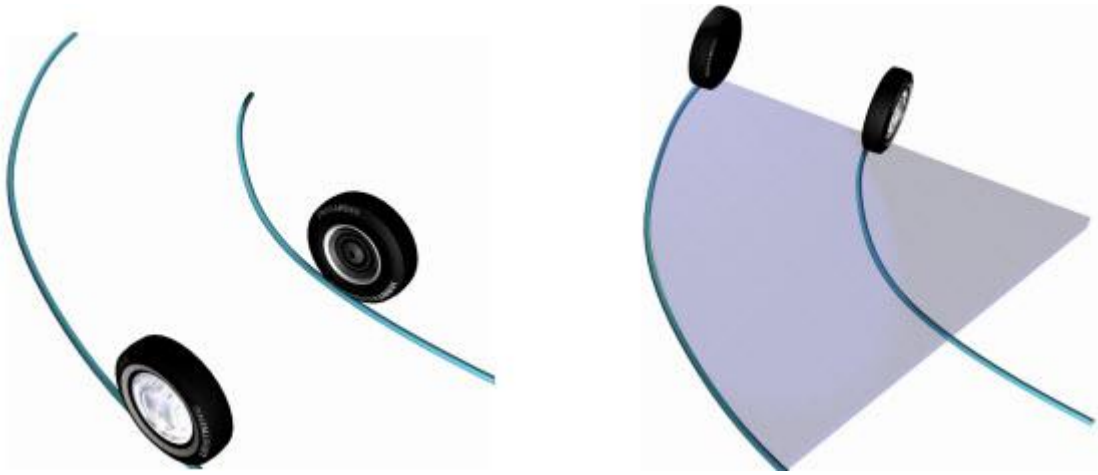

Fig.2 While taking a right turn the left wheel has to travel more distance; this means more speed to left wheel

This means that the left wheel has to rotate at a higher speed compared to the right wheel. If these wheels were connected using a solid shaft, the wheels would have to slip to accomplish the turn. This is exactly where a differential comes in handy. The ingenious mechanism in a differential allows the left and right wheels to turn at different rpms, while transferring power to both wheels.

Parts of a Differential

We will now learn how the differential achieves this in a step-by-step manner using the simplest configuration. Power from the engine is transferred to the ring gear through a pinion gear. The ring gear is connected to a spider gear.

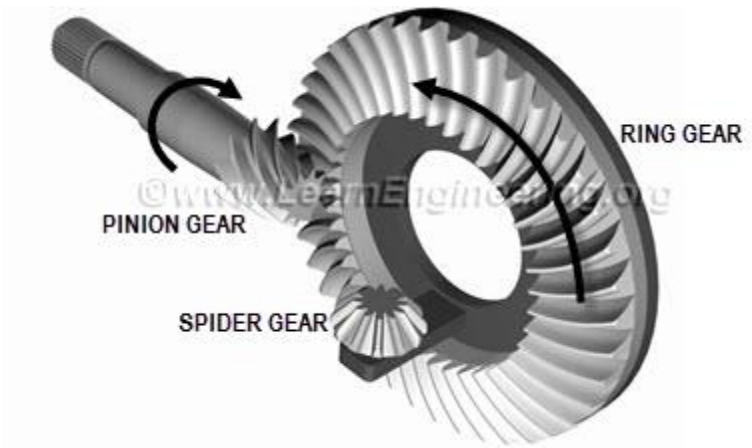

Fig.3 Motion from the pinion gear is transferred to the spider gear

The spider gear lies at the heart of the differential, and special mention should be made about its rotation. The spider gear is free to make 2 kinds of rotations: one along with the ring gear (*rotation*) and the second on its own axis (*spin*).

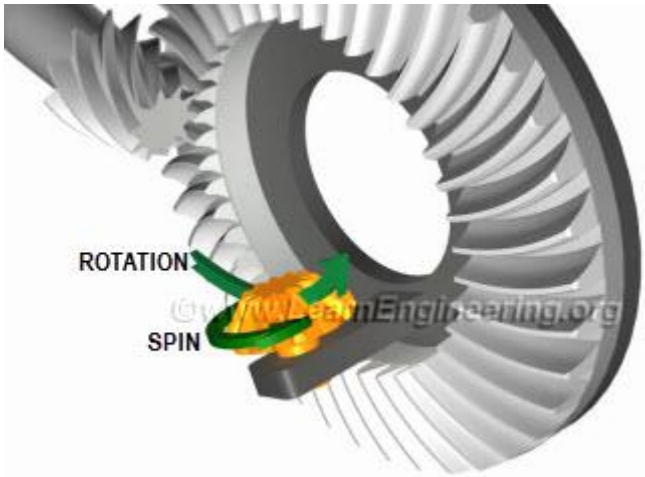

Fig.4 Spider gear is free to make 2 kinds of rotations

The spider gear is meshed with 2 side gears. You can see that both the spider and side gears are bevel gears. Power flow from the drive shaft to the drive wheels follows the following pattern. From the drive shaft power is transferred to the pinion gear first, and since the pinion and ring gear are meshed, power flows to the ring gear. As the spider gear is connected with the ring gear, power flows to it. Finally from the spider gear, power gets transferred to both the side gears.

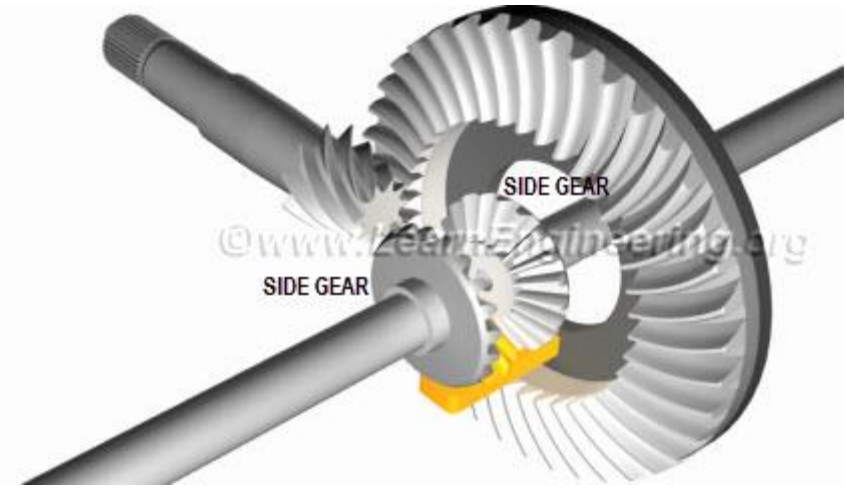

Fig.5 The basic components of a standard differential

Differential Operation

Now let's see how the differential manages to rotate the side gears (drive wheels) at different speeds as demanded by different driving scenarios.

The vehicle moves straight

In this case, the spider gear rotates along with the ring gear but does not rotate on its own axis. So the spider gear will push and make both the side gears turn,

and both will turn at the same speed. In short, when the vehicle moves straight, the spider-side gear assembly will move as a single solid unit.

Fig.6 While the vehicle moves straight, the spider gear does not spin; it pushes and rotate the side gears

The vehicle takes a right turn

Now consider the case when the vehicle is taking a right turn. The spider gear plays a pivotal role in this case. Along with the rotation of the ring gear it rotates on its own axis. So, the spider gear is has a combined rotation. The effect of the combined rotation on the side gear is interesting.

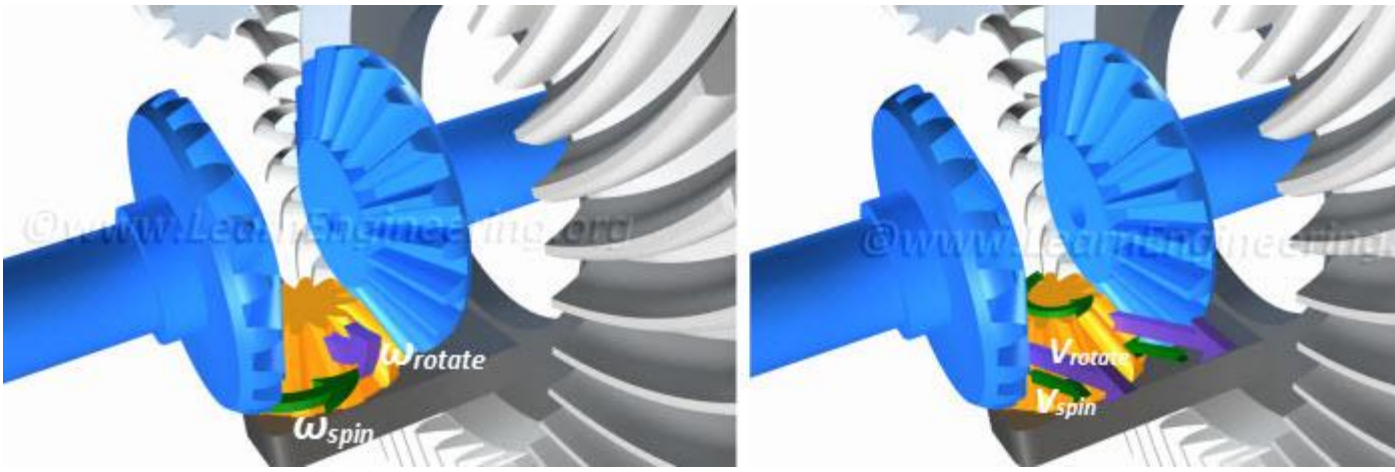

Fig.7 To get peripheral velocity at left and right side of spider gear we have to consider both rotation and spin of it

When properly meshed, the side gear has to have the same peripheral velocity as the spider gear. Technically speaking, both gears should have the same pitch line velocity. When the spider gear is spinning as well as rotating, peripheral velocity on the left side of spider gear is the sum of the spinning and rotational velocities. But on the right side, it is the difference of the two, since the spin

velocity is in the opposite direction on this side. This fact is clearly depicted in Fig.7. This means the left side gear will have higher speed compared to the right side gear. This is the way the differential manages to turn left and right wheels at different speeds.

The vehicle takes a left turn

While taking a left turn, the right wheel should rotate at a higher speed. By comparing with the previous case, it is clear that, if the spider gear spins in the opposite direction, the right side gear will have a higher speed.

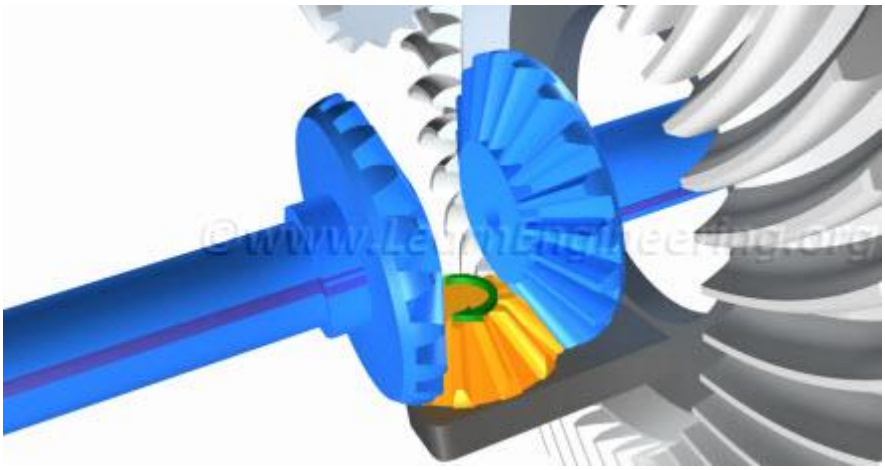

Fig.8 While taking left turn the spider gear spins in opposite direction

Use of more Spider gears

In order to carry a greater load, one more spider gear is usually added. Note that the spider gears should spin in opposite directions to have the proper gear motion. A four-spider-gear arrangement is also used for vehicles with heavy loads. In such cases, the spider gears are connected to ends of a cross bar, and the spider gears are free to spin independently.

Fig.9 Double spider gear arrangement is usually used to carry more loads

Other functions of the Differential

Apart from allowing the wheels to rotate at different rpm differential has 2 more functions. First is speed reduction at the pinion-ring gear assembly. This is achieved by using a ring gear which is having almost 4 to 5 times number of teeth as that of the pinion gear. Such huge gear ratio will bring down the speed of the ring gear in the same ratio. Since the power flow at the pinion and ring gear are the same, such a speed reduction will result in a high torque multiplication.

You can also note one specialty of the ring gear, they are hypoid gears. The hypoid gears have more contact area compared to the other gear pairs and will make sure that the gear operation is smooth.

The other function of the differential is to turn the power flow direction by 90 degree.

AIM: Study of fuel supply system of a petrol engine.

An internal combustion engine is operated by liquid or gaseous fuel. Hence, the fuel supply in ***Petrol Engine*** is an essential for engine running.
Actually, gaseous fuel is most useful due to high octane rating, less deposit trouble, and clean operation. But the use of this type of fuel is mostly restricted to those areas where gas is available.
It is also quite difficult to carry gas for automobile purpose. However in many metro cities compressed natural gas (CNG) is available and many vehicles are running on it.

Still today liquid fuels, obtained from Petroleum (Crude Oil) are used to the largest extent primarily. This is due to large quantities of energy per unit volume. Also, the ease of handling, storing and transportation.
This type of fuel has some *engineering* disadvantages as like, vaporization, atomized or at least partly vaporized during the process of mixing.

What is the fuel supply system in a petrol engine?

Parts of Fuel Supply System in Petrol Engine

01) Fuel Storage Tank
02) Fuel Pump
03) Fuel Filter
04) Carburetor
05) Inlet manifold
06) Inlet Valve
The fuel can be supplied to the petrol engine under gravity or under pressure.

- Gravity System

Here, the fuel flows to the engine under gravitational force. In gravity System, the fuel storage tank is placed at a higher level than cylinder head. This system doesn't require the fuel pump.

- Pressure System

Here, the fuel from the fuel tank is forced by the fuel pump through the filter to the carburetor. In Pressure System, the fuel tank is placed at a lower level than the petrol engine head. Sometimes away from the petrol engine also.
For example, motor cars, trucks etc. Keep the fuel tank away from the hot engine. So, we can avoid the chances of catching fire in the event of an accident.
In a fuel system for a petrol engine, the fuel storage tank is located well below the carburetor.
The fuel is supplied by the fuel pump to the carburetor through the fuel filter. Hence fuel filter removes the dirt and other foreign particles from the petrol. This system is extensively used for motor cars.

- *So, Here is the Description of parts used in fuel supply system*

- **Fuel Pump**

A diaphragm type fuel pump is used in petrol engines as there is no need of extra high pressure of the fuel. So, the fuel pump is extensively used to pump the fuel from fuel tank to the carburetor in the automotive engines.
A flexible diaphragm is moved down against the force of the diaphragm spring. This is done by the diaphragm lever and the operating arm which is actuated by the camshaft eccentrically.
The pressure falls in the pump chamber, hence the fuel from the fuel tank flows through the fuel inlet valve.

Fuel inlet valve closes at the return stroke as diaphragm spring forces the diaphragm upwards. Same time fuel outlet valve opens and thus the fuel starts flowing from the pump to the carburetor.

- **Fuel Filter**

To get rid of unwanted dirt, filters are used. So, a filter used to clean the air is known as an air filter. Fuel filter cleans the fuel, whereas oil filter cleans the lubricating oil.
In filters, paper elements, cloth elements, felt elements and the combination of felt and cloth elements are used. Basically, there are two types of fuel filters used,
a) Preliminary fuel filter
b) Secondary fuel filter

- **Carburetor**

This is the device which mixes the fuel with air. A carburetor supplies this mixture to induction manifold of the petrol engine.
The carburetor controls the required quantity of fuel and breaks up into minute

globules. Afterward being mixed with the correct quantity of air. Types of carburetor are

a) Zenith carburetor
b) Solex carburetor
c) Amal carburetor

AIM: To study fuel supply system in diesel engine.

THEORY: fuel supply system is a separate system used to deliver diesel at correct time in correct quantity, to a diesel engine (or C.I engine), for smooth and efficient operation.

The operation of a diesel engine is different from that of a petrol engine. In a petrol engine, air-fuel mixture is supplied by a carburettor to the engine, at the beginning of the suction stroke. But in a diesel engine, fuel (without air) is supplied at the end of the compression stroke, by means of a fuel supply system.

Fuel supply system is the food pipe of a vehicle.

Diagram of fuel supply system in diesel engine:

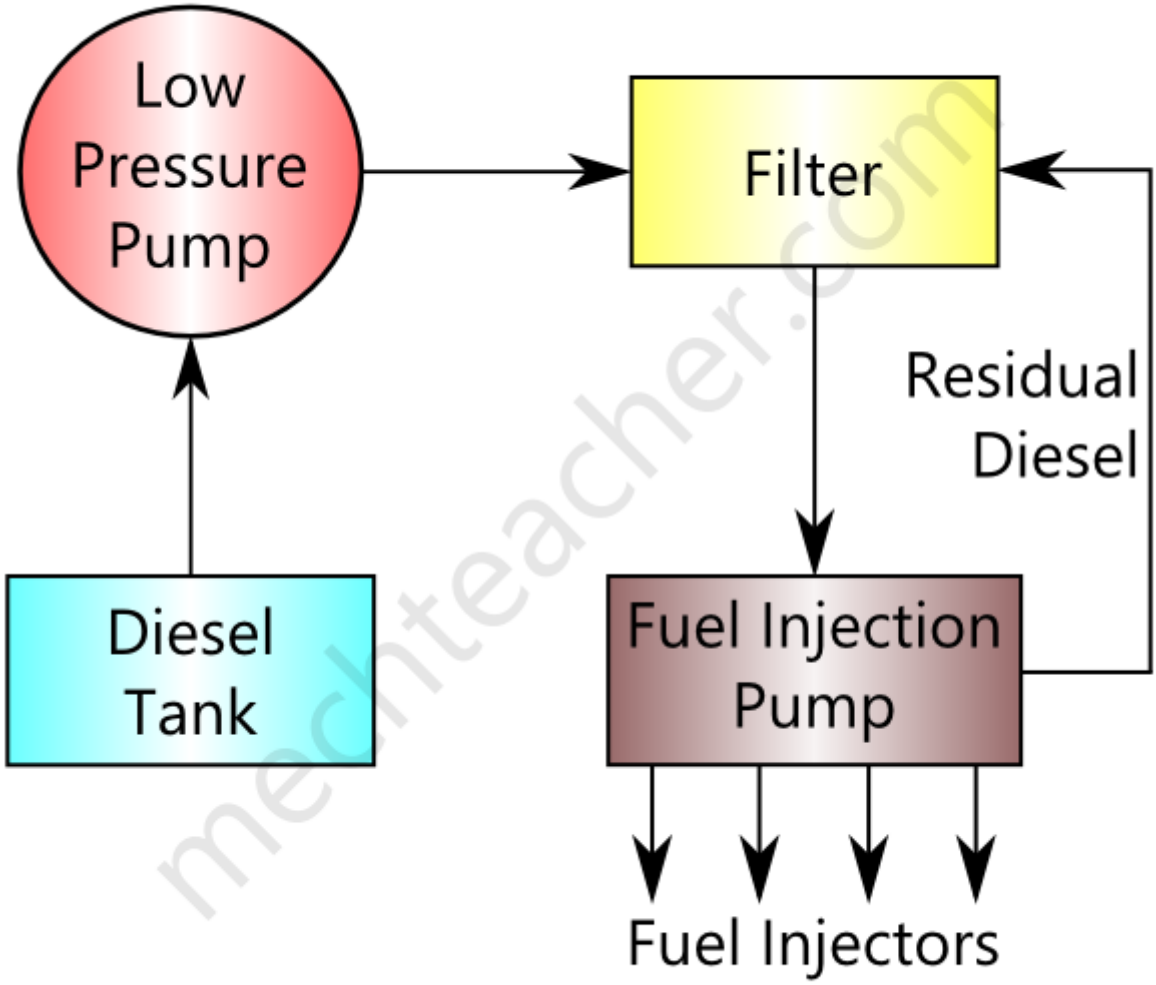

Components:

Fuel supply system in diesel engine is made of the following components:

1. Diesel tank or reservoir
2. Low pressure pump
3. Filter
4. Fuel injection pump
5. Fuel injectors

1. Diesel tank or reservoir:

Whenever you supply fuel to a diesel engine vehicle, it is stored in the diesel tank. Diesel tank temporarily stores diesel that is to be supplied to the engine.

2. Low pressure pump:

It pumps the diesel at a low pressure to the fuel injection pump through a filter.

3. Filter:

Before diesel is supplied to an engine, it must be filtered to remove any unwanted impurities. Filter is used for this purpose.

4. Fuel injection pump:

This is the most important component of the fuel injection system.

Fuel injection pump pressurizes the fuel to the required level and injects it correctly at the end of the compression stroke, during each cycle of operation of the engine.

. Fuel injectors:

Injectors are devices used to inject the fuel to the cylinder. In diesel engine, when fuel is injected, it is automatically atomized.

Working:

Diesel is pumped from the diesel tank by a low pressure pump. It is passed through a filter. The filter removes any unwanted impurities in the diesel.

Filtered diesel is supplied to the inlet port of the fuel injection pump. The fuel injection pump automatically pressurizes the diesel to the required level and supplies it to the fuel injector. The fuel injector forces the fuel into the cylinder at the end of the compression stroke, during each cycle of operation of the engine.
Fuel injection pump is operated by means of a cam shaft. CAV fuel injection is the most common fuel injection pump used in diesel engines.

Any leak-off diesel from the fuel injection pump is supplied back into the filter as shown in the diagram above

AIM:Study of Lubrication system of an IC Engine

INTRODUCTION

When any two metal surfaces are in contact with each other and a relative motion takes place between them, then force of friction is developed however smooth the surfaces may appear to be.

The frictional force developed in an I.C.Engine which consists of no. of sliding & rotating components like bearings, pistons, valve gears etc may be so large that it may cause excessive wear & tear due to which replacement of components is very necessary. A large amount of the power developed by the engine may also be used to overcome this force of friction. Due to friction, heat is also generated. Due to generation of heat, the temp.of various components may rise to so high a value that a complete seizure of the engine components may take place.

Therefore, in order to overcome these difficulties, a thin film of a suitable lubricant is interposed where the metal-metal contact takes place. This thin film reduces the friction considerably by keeping the two metal surfaces apart from each other and thus wear, tear & temp. developed are also reduced greatly.

LUBRICATION

To supply lubricating oil between the moving parts is simply termed as "lubrication".

Purpose of Lubrication

1.To reduce friction between the moving parts to a minimum value, thereby to reduce power loss due to friction.
2. To minimize wear of moving parts as far as possible.
3. To provide cooling effect by acting as a cooling medium & remove heat from various parts.
4. To form an effective seal between the piston rings & cylinder walls and thus prevent the escape of gases from the cylinder and avoid power loss.
5. To keep the engine parts clean by washing off and carrying away the impurities from the engine parts.
6. To provide cushion (protection) to the engine by absorbing the shocks developed by sudden application of load and instant combustion of fuel in the cylinder of the engine.
7. To reduce noise by absorbing shocks between the bearings and engine parts.
8. To prevent metallic components from corrosive attack by the acid formed during the combustion process.

Properties of Lubricant

1. Viscosity: Viscosity is a measure of the resistance to flow or the internal friction of the lubricant. It is used to grade lubricants. Viscosity is inversely proportional to temp. If temp.increases, the viscosity of the lubricant decreases and if temp. decreases, the viscosity of the lubricant increases. That is why low viscos oil is recommended for automobile engines in winter than summer. It also explains why engines are so hard to start in very cold weather. The viscosity of a lubricant should be just sufficient to ensure lubrication. If it is more than this value, power loss will be higher due to increased oil resistance.

2. Oiliness: It is the property of a lubricating oil to spread & attach itself firmly to the bearing surfaces. Generally, the oiliness of the lubricating oil should be high particularly when it is to be used for mating surfaces subjected to a high intensity of press. So that the metal is protected by a layer of the oil and the wear is considerably reduced.
3. Flash Point: Flash point of an oil is the min. temp. at which the lubricating oil will flash when a small flame is passed across its surface. The flash point of the lubricating oil must be higher than the temp. likely to be developed in the bearings in order to avoid the possibility of fire hazards.
4. Fire Point: If the lubricating oil is further heated after the flash point has been reached, the lowest temp. at which the oil will burn continuously is called fire point.
The fire point of a lubricant also must be high so that the oil does not burn in service.
5. Cloud Point: It is the temp. at which the lubricating oil changes its state from liquid to solid.
6. Pour Point: It is the lowest temp. at which the lubricating oil will pour. This property must be considered because of its effect on starting an engine in cold weather.
7. Corrosiveness: The present of acid (mineral acid, petroleum acid) is harmful to the metal surfaces. The lubrication oil should not attack chemically the materials used for the mating components.
The lubricant should not be corrosive, but it should give protection against corrosion.
8. Adhesives: It is the property of lubricating oil due to which the oil particles sticks with the metal surface.
9. Cleanliness: A lubricating oil must be clean. It should not contain dust and dirt particles

TYPES OF LUBRICANTS:
Lubricants are at following three types.
1. Solid: graphic, mica etc
2. Semi solid: grease
3. Liquid: mineral oil, vegetable oil, animal oil etc.
ϖ Graphite is often mixed with oil to lubricate automobile spring. Graphite is also used as a cylinder lubricant.
ϖ Grease is used for chassis lubrication.
ϖ Mineral oils are almost used for engine lubrication.
Grade of lubricants: Generally lubricating oils are graded by their SAE (society of automotive engineers) viscosity no.
5w,10w,20w SAE no. lubricating oil are for winter use.
20,30,40 SAE no. lubricating oil are for summer use.
Lubrication System: It is the system by means of which various engine parts are lubricated.

Engine Lubrication System: Engine lubrication system is mainly of following types.
1. Splash system
2. Pressure system
3.Petroil system

Splash System: In this system of lubrication the lubricating oil is stored in an oil sump. A scoop or dipper is made in the lower part of the connecting rod. When the engine runs, the dipper dips in the oil once in every revolution of the crank shaft, the oil is splashed on the cylinder wall. Due to this action engine walls, piston ring, crank shaft bearings are lubricated.
Pressure System: In this system of lubrication, the engine parts are lubricated under pressure feed. The lubricating oil is stored in a separate tank (in case of dry sump system) or in the sump (in case of wet sump system), from where an oil pump (gear pump) delivers the oil to the main oil gallery at a pressure of 2-4 kg/cm2 through an oil filter.
The oil from the main gallery goes to main bearing, from where some of it falls back to the sump after lubricating the main bearing and some is splashed to lubricate the cylinder walls and remaining goes through a hole to the crank pin. From the crank pin the lubricating oil goes to the piston pin through a hole in the connecting rod, where it lubricates the piston rings.
For lubricating cam shaft and liming gears the oil is led trough a separate oil line from the oil gallery.
The oil pressure gauge used in the system indicates the oil pressure in the system. Oil filter & strainer in the system clear off the oil from dust, metal particles and other harmful particles.
Petroil System: This system of lubrication is generally adopted in two stroke petrol engine line scooter and motor cycle. It is the simplest form of lubricating system. It does not consist of any separate part like oil pump for the purpose of lubrication.
In this system the lubricating oil is mixed into the fuel (petrol) while filling in the petrol tank of the vehicle in a specified ratio (ratio of fuel and lubricating oil is from 12:1 to 50:10 as per manufacturers specifications or recommendations. When the fuel goes into the crank chamber during the engine operation, the oil particles go deep into the bearing surfaces due to gravity and lubricate then. The piston rings, cylinder walls, piston pin etc are lubricated in the same way. If the engine is allowed to remain unused for a considerable time, the lubricating oil separates oil from petrol & leads to clogging (blocking) of passages in the carburetor, resulting the engine starting trouble. This is the main disadvantage of this system.

Parts of lubricating system
1. Oil sump: It is the lowest part of the crank chamber. It provides a covering for the crank shaft and contains oil. It is usually made of steel pressings. Sometimes it is made of aluminium or cast iron. It contains a drain plug at its bottom to drain out the oil.
2. Oil pump: Generally gear pump is used for pressure lubrication of I.C Engine. The function of the oil pump is to supply oil under pressure to various engine parts to be lubricated.
Gear pump: It consists of two messed spur gears enclosed in a housing. There is a very little clearance between the gear teeth and housing. One gear is attached to a shaft which is driven through suitable gear from the cam shaft or crank shaft of the engine. The other gear is free to rotates on its own bearing. When the pump is in operation, the oil is driven between the gear teeth from the inlet side to the outlet side. The pressure & quantity of the oil supplied by the pump can be varied by varying the speed of the gears at which they rotate.

It delivers oil at a pressure of about 2-4 kg/cm2. A pressure relief valve is also provided in many oil pump to relieve the excessive pressure due to high engine speed.

3. Oil filter: as its name indicates, lubricating oil is filtered through it. The function of filter is to remove the impurities from the lubricating oil which may damage the engine bearings.

It consists of a filtering element placed in metallic casing. At the centre of the filtering element a perforated metal tube is fitted which collect the filtered oil and supply it to oil gallery.

4. Oil strainer: it is simply a wire mesh screen. It is attached to the inlet of the pump so that the oil going into the oil pump is free from impurities.

CONCLUSION:

We often think that the function of lubricating oil is only to lubricate the engine parts so that the power loss due to friction is minimum. But a lubricating oil has many other functions which are explained before.

Lubrication must be done properly and right type of lubricant should be used. Improper or inadequate lubrication of engine will cause serious trouble such as scored cylinders, worn or burnt out bearing, misfiring cylinders, dirty spark plug, stuck piston rings, engine deposits and sludge and excessive fuel consumption.

Oil mist lubrication oils are applied to rolling element (antifriction) bearings as an oil mist. Neither oil rings nor constant level lubricators are used in pumps and drivers connected to plant-wide oil mist systems. Oil mist is an atomized amount of oil carried or suspended in a volume of pressurized dry air. The oil mist, actually a ratio of one volume of oil suspended or carried in 200,000 volumes of clean, dry air, moves in a piping system (header). The point of origin is usually a mixing valve (the oil mist generator), connected to this header. Branch lines often feed oil mist to hundreds of rolling elements in the many pumps and drivers connected to a plant-wide system.

At standstill, or while on standby, pump and driver bearings are preserved by the surrounding oil mist, which exists in the bearing housing space at a pressure just barely higher than ambient. These pump and driver bearings are lubricated from the time when atomized oil globules join (or wet out) to become larger oil droplets. This joining-into-large-droplets starts whenever the equipment shafts rotate, which is when small globules come into contact with each other and start coating the bearing elements.

Splash lubrication system is used on small, stationary four-stroke engines. In this system, the cap of the big end bearing on the connecting rod is provided with a scoop which strikes and dips into the oil-filled through at every revolution of the crank shaft and oil is splashed all over the interior of crank case into the piston and over the exposed portion of the cylinder is shown in the figure below.

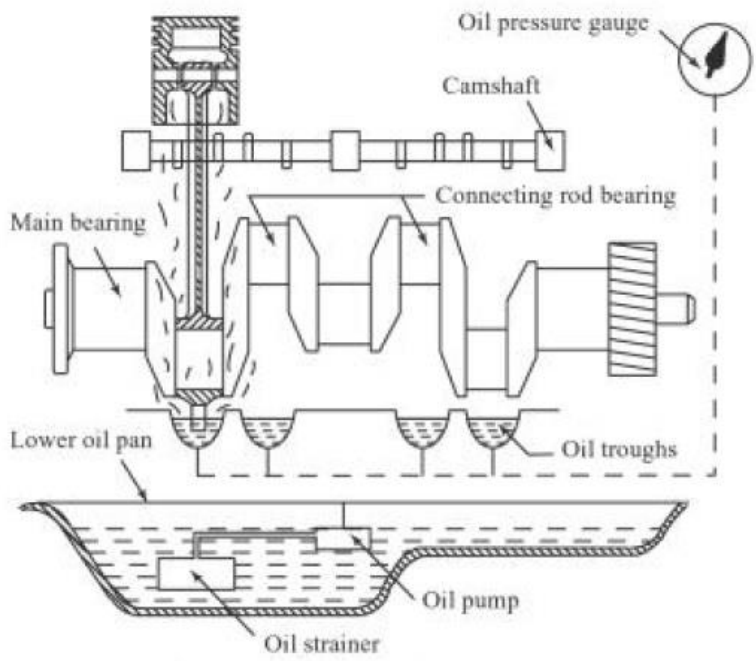

A hole is drilled through the connecting rod cap through which the oil passes to the bearing surface. Oil pockets are provided to catch the splashed oil over all the main bearings and also the cam shaft bearings. From these pockets oil passes to the bearings through drilled hole. The surplus oil dripping from the cylinder flows back to the oil sump in the crank case.

2.2 Splash and pressure lubrication system:

Splash and pressure lubrication system is combination of splash and pressure system as shown in below figure. In this system, the lubricating oil is supplied by a pump under pressure to main and cam shaft bearings. the oil is also directed in the form of spray from nozzle or splashed by a scoop or dipper on the big end to lubricate bearings at the big end of the connecting rod, crank pin, gudgeon pin, piston rings and cylinder.

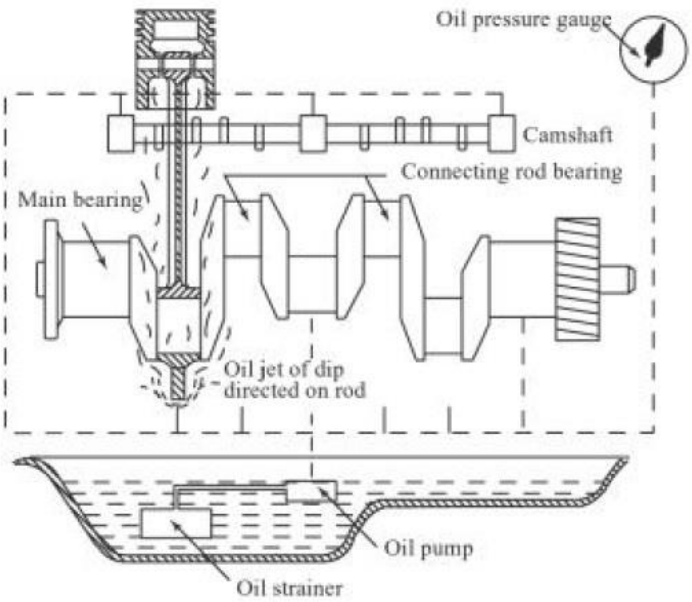

2.3 Pressurized lubrication system:

In **pressurized lubrication system**, the lubricating oil is supplied by a pump under pressure to all parts requiring lubrication as shown in below figure. The oil under the pressure is supplied to main bearings of the crank shaft and camshaft. Holes drilled through the main crank shaft bearings journals, communicate oil to big end bearing and small end bearings through the hole drilled in the connecting rod. a pressure gauge is provided to confirm the circulation of oil to various parts.

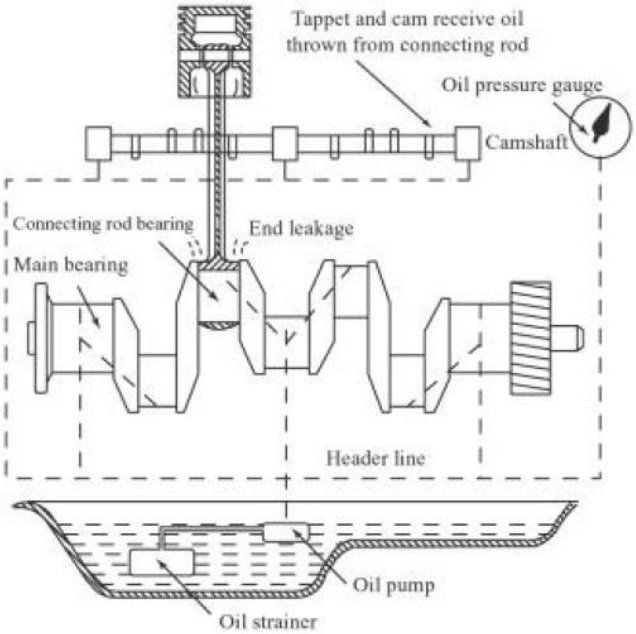

This system provides sufficient lubrication to all parts and is favoured by most of the engine manufacturers. This is used in most heavy duty and high-speed engines.